

Eastern European Electric Company

Interim Condensed Consolidated Financial Statement

30 September 2026

Amsterdam, The Netherlands

TABLE OF CONTENTS

GENERAL INFORMATION i
INTERIM CONDENSED CONSOLIDATED STATEMENT OF PROFIT OR LOSS AND OTHER COMPREHENSIVE INCOME 1
INTERIM CONDENSED CONSOLIDATED STATEMENT OF FINANCIAL POSITION 2
INTERIM CONDENSED CONSOLIDATED STATEMENT OF CASH FLOWS 4
INTERIM CONDENSED CONSOLIDATED STATEMENT OF CHANGES IN EQUITY 6
INTERIM CONDENSED CONSOLIDATED STATEMENT OF PROFIT OR LOSS BY SUBSIDIARIES 7
INTERIM CONDENSED CONSOLIDATED STATEMENT OF PROFIT OR LOSS BY SUBSIDIARIES 8
1. General information and nature of operations 9
2. Basis of preparation 12
3. Revenue from operating activities 45
4. Expenses of operating activities 46
5. Other revenue 48
6. Other income 48
7. Other operating expenses 48
8. Finance expenses 49
9. Finance income 49
10. Recovered/(accrued) impairment loss on financial assets 49
11. Income tax 50
12. Property, plant and equipment 51
13. Other intangible assets 51
14. Financial assets - non current 52
15. Inventories 52
16. Trade and other receivables 52
17. Financial assets – current 54
18. Related party transactions 54
19. Cash and cash equivalents 57
20. Share capital 58
21. Share premium 58
22. Reserve from remeasurement of defined benefit plans 59
23. Cash flow hedge reserve 59
24. Bond issue 59
25. Bank loans 61
26. Pension and other employee obligations 63
27. Lease 64
28. Government grants 65
29. Trade and other payables 66
30. Provisions 66
31. Financial Risk Management 66
32. Non-controlling interest 75
33. Events after the reporting period 75
34. Authorisation of the interim consolidated financial statements 75

GENERAL INFORMATION

Management Board:
Milen Christov
Yoan Ivanov

Seat and registered office:
Kerkstraat 134A,
1017 GP Amsterdam
The Netherlands

Register and registration number:

EASTERN EUROPEAN ELECTRIC COMPANY B.V., established and existing under the laws of Netherlands in the legal form Besloten Vennootschap (comparable with Private Limited Liability Company), registered with the Netherlands Chamber of Commerce under CCI number 75462788 and RSIN number 860292034.

Securities:

EASTERN EUROPEAN ELECTRIC COMPANY B.V. issued EUR 500 million Guaranteed Secured Notes with five-year maturity (15 May 2030), secured, offered and sold under Regulation S/Rule 144A, with a fixed annual coupon of 6.500% (the "**Bond**"). Bond notes are listed on Luxembourg Stock Exchange, market segment Euro MTF under ISIN XS3073101712 for Regulation S (Non-U.S.) and under ISIN XS3073621552 for Rule 144A (U.S.).

Credit ratings:
The Issuer has been rated Ba2 (outlook stable) by Moody's Deutschland GmbH ("**Moody's**") and BB (outlook stable) by Fitch Ratings Ireland Limited ("**Fitch**").

Banks:

UniCredit Bulbank
Ascory Bank (formerly Varengold Bank)
ABN AMRO Bank
TBI Bank

Auditors:
Grant Thornton, The Netherlands

INTERIM CONDENSED CONSOLIDATED STATEMENT OF PROFIT OR LOSS AND OTHER COMPREHENSIVE INCOME
for the period ended 30 September 2026

	Notes	*30.09.2026* *EUR'000*	*30.09.2025* *EUR'000*
Revenue from operating activities	3.1	1 178 940	918 268
Expenses of operating activities	4	(968 940)	(729 793)
Gross Operating Profit		**210 000**	**188 475**
Other revenue	5	1 896	1 719
Other income, net	6	10 479	4 273
Other operating expenses	7	(96 305)	(92 380)
(Accrued)/recovered impairment loss on financial assets, net	10	(1 397)	271
EBITDA		**124 673**	**102 358**
Financial expenses	8	(34 894)	(41 640)
Financial income	9	6 899	5 752
EBTDA		**96 678**	**66 470**
Depreciation and amortization	12, 13 27.1.1	(48 724)	(45 542)
EBT		**47 954**	**20 928**
Income tax expenses	11.1	(7 778)	(6 642)
Net profit for the period		**40 176**	**14 286**
Attributable to:			
Equity holders of the parent company		**40 155**	**14 291**
Non-controlling interests	32	**21**	**(5)**
Other comprehensive income/(loss)			
Components of other comprehensive income that will not be reclassified subsequently to profit or loss			
Subsequent remeasurement of retirement benefit obligations	22	-	-
Components of other comprehensive income that will be reclassified to profit or loss in subsequent periods			
Net profit/(loss) on cash flow hedges	23	-	97
Other comprehensive profit/(loss) for the period, net of tax		**-**	**97**
Total comprehensive income for the period, net of tax		**40 176**	**14 383**
Attributable to:			
Equity holders of the parent		**40 155**	**14 388**
Non-controlling interests	32	**21**	**(5)**

Milen Assenov Christov — Digitally signed by Milen Assenov Christov Date: 2026.11.23 15:09:25 +02'00'

Milen Christov
Eastern European Electric Company B.V.
/Member of the Management Board/

Yoan Hristov Ivanov — Digitally signed by Yoan Hristov Ivanov Date: 2026.11.23 14:12:08 +01'00'

Yoan Ivanov
Eastern European Electric Company B.V.
/Member of the Management Board/

HRISTIANA TONCHEVA GEORGIEVA — Digitally signed by HRISTIANA TONCHEVA GEORGIEVA Date: 2026.11.23 15:18:44 +02'00'

Hristiana Georgieva, ACCA
Eastern European Electric Company B.V.
/Preparer/

INTERIM CONDENSED CONSOLIDATED STATEMENT OF FINANCIAL POSITION
as at 30 September 2026

	Notes	30.09.2026 EUR'000	31.12.2025 EUR'000
ASSETS			
Non-current assets			
Property, plant and equipment	12	523 850	492 300
Right-of-use assets	27.1.1	23 339	25 525
Goodwill		1 278	1 278
Other intangible assets	13	39 934	41 952
Financial assets – non-current	14	515	515
Deferred tax assets	11.2	2 618	2 618
Total Non-current assets		**591 534**	**564 188**
Current assets			
Inventories	15	24 147	21 964
Trade and other receivables	16	232 496	238 236
Contract assets	3.2	60 386	76 831
Financial assets - current	17	38 568	22 519
Receivables from related parties	18.1	13 593	2 723
Advances and prepayments, other receivables		45 292	45 978
Income tax receivables		226	633
Cash and cash equivalents	19	77 214	114 815
Total Current assets		**491 922**	**523 699**
TOTAL ASSETS		**1 083 456**	**1 087 887**

Milen Assenov Christov — Digitally signed by Milen Assenov Christov Date: 2026.11.23 15:09:45 +02'00'

Milen Christov
Eastern European Electric Company B.V.
/Member of the Management Board/

Yoan Hristov Ivanov — Digitally signed by Yoan Hristov Ivanov Date: 2026.11.23 14:12:27 +01'00'

Yoan Ivanov
Eastern European Electric Company B.V.
/Member of the Management Board/

HRISTIANA TONCHEVA GEORGIEVA — Digitally signed by HRISTIANA TONCHEVA GEORGIEVA Date: 2026.11.23 15:19:17 +02'00'

Hristiana Georgieva, ACCA
Eastern European Electric Company B.V.
/Preparer/

INTERIM CONDENSED CONSOLIDATED STATEMENT OF FINANCIAL POSITION
as at 30 September 2026 (continued)

	Notes	*30.09.2026* *EUR'000*	*31.12.2025* *EUR'000*
EQUITY AND LIABILITIES			
Equity			
Share capital	20	1	1
Share premium	21	29 940	28 990
Reserve from remeasurement of defined benefit plans	22	(1 188)	(1 188)
Cash flow hedge reserve	23	-	-
Retained earnings		206 230	187 391
Current period profit		40 155	18 825
Total equity, attributable to equity holders of the parent		**275 138**	**234 019**
Non-controlling interest	32	**13**	**(8)**
Total equity		**275 151**	**234 011**
Liabilities			
Non-current liabilities			
Long-term portion of bond issue	24	493 162	491 751
Long-term portion of bank loans	25	3 039	13 859
Retirement benefit obligations	26.1	12 518	12 518
Lease liabilities	27	23 234	22 511
Deferred tax liabilities	11.3	6 975	7 097
Contract liabilities	3.2	18 320	17 377
Government grants	28	12 157	12 153
Total Non-current liabilities		**569 405**	**577 266**
Current liabilities			
Short-term portion of bond issue	24	12 309	20 568
Short-term portion of bank loans	25	13 902	7 543
Trade and other payables	29	146 734	203 595
Payables to related parties	18.2	23 613	257
Provisions	30	4 524	6 059
Contract liabilities	3.2	26 884	26 449
Retirement benefit obligations	26.1	839	1 551
Lease liabilities	27	1 175	3 829
Government grants	28	1 790	678
Income tax payables		7 130	6 081
Total Current liabilities		**238 900**	**276 610**
TOTAL LIABILITIES		**808 305**	**853 876**
TOTAL EQUITY AND LIABILITIES		**1 083 456**	**1 087 887**

Milen Assenov Christov
Digitally signed by Milen Assenov Christov
Date: 2026.11.23 15:09:58 +02'00'

Milen Christov
Eastern European Electric Company B.V.
/Member of the Management Board/

Yoan Hristov Ivanov
Digitally signed by Yoan Hristov Ivanov
Date: 2026.11.23 14:12:42 +01'00'

Yoan Ivanov
Eastern European Electric Company B.V.
/Member of the Management Board/

HRISTIANA TONCHEVA GEORGIEVA
Digitally signed by HRISTIANA TONCHEVA GEORGIEVA
Date: 2026.11.23 15:19:36 +02'00'

Hristiana Georgieva, ACCA
Eastern European Electric Company B.V.
/Preparer/

INTERIM CONDENSED CONSOLIDATED STATEMENT OF CASH FLOWS
for the period ended 30 September 2026

	Notes	*30.09.2026* *EUR'000*	*30.09.2025* *EUR'000*
Cash flow from operating activities			
Profit before tax		**47 954**	**20 928**
Adjustment for reconciliation of profit before tax with net cash flows *Non-cash:*			
Depreciation and amortization	12, 13, 27.1.1	48 724	45 542
Loss/(gain) on sale and derecognition of property, plant and equipment	12	(4)	(11)
Written-off equipment	6	(580)	(752)
(Reversed)/accrued impairment loss on financial assets, net	10	1 397	(271)
(Reversed)/accrued impairment loss of inventories	15	(200)	(228)
Movement in provisions	30	(1 535)	(501)
Movement in retirement benefit obligations	26	(714)	(499)
Finance costs	8	34 894	41 640
Finance income	9	(6 899)	(5 752)
Adjustments of working capital:			
(Increase)/decrease in trade and other receivables, contract assets and receivables from related parties	16, 18.1	16 862	18 336
(Increase)/decrease in prepaid expenses	16	686	35 856
(Increase)/decrease in inventories	15	(1 983)	(5 128)
Increase/(decrease) in trade and other payables, contract liabilities and payables to related parties	29, 18.2	(41 975)	(63 585)
Payments for financial expenses		(667)	(299)
Corporate income tax paid		(6 435)	(3 526)
Change in lease liabilities		(1 125)	(1 213)
Other payments		(1 349)	539
Net cash flows from operating activities		**87 051**	**81 076**
Cash flow from investing activities			
Proceeds from sale of property, plant and equipment	12	3	58
Purchase of property, plant and equipment	12	(71 302)	(68 662)
Proceeds/(payments) for investments, trade loans	17	(16 049)	(14 462)
Net cash flows used in investing activities		**(87 348)**	**(83 066)**

Milen Assenov Christov
Digitally signed by Milen Assenov Christov
Date: 2026.11.23 15:10:12 +02'00'

Milen Christov
Eastern European Electric Company B.V.
/Member of the Management Board/

Yoan Hristov Ivanov
Digitally signed by Yoan Hristov Ivanov
Date: 2026.11.23 14:12:56 +01'00'

Yoan Ivanov
Eastern European Electric Company B.V.
/Member of the Management Board/

HRISTIANA TONCHEVA GEORGIEVA
Digitally signed by HRISTIANA TONCHEVA GEORGIEVA
Date: 2026.11.23 15:19:52 +02'00'

Hristiana Georgieva, ACCA
Eastern European Electric Company B.V.
/Preparer/

INTERIM CONDENSED CONSOLIDATED STATEMENT OF CASH FLOWS
for the period ended 30 September 2026 (continued)

	Notes	*30.09.2026* *EUR'000*	*30.09.2025* *EUR'000*
Cash flow from financial activities			
Proceeds upon issue of equity	21	5 200	-
Proceeds from issuance of shares to non-controlling interests	32	-	1
Decrease of share premium reserve	21	(4 250)	(12 500)
Lease payments		(2 500)	(1 907)
Proceeds from bond issue	24	-	495 500
Interest expense paid on bonds	8	(32 500)	-
Proceeds from loans (principal)	25	-	52 552
Repayment of loans (principal)	25	(4 623)	(507 873)
Proceeds from government grants	28	2 469	-
Interest expense paid on loans		(960)	(12 059)
Finance costs related to bank loans	8	(22)	(202)
Finance costs/income paid/received on cash flow hedges		-	(9 119)
Other payments/proceeds, net		(118)	449
Net cash flow from financing activities		**(37 304)**	**4 842**
Net increase/(decrease) in cash and cash equivalents		**(37 601)**	**2 852**
Cash and cash equivalents at 1 January		114 815	85 925
Cash and cash equivalents at end of period	19	**77 214**	**88 777**

Milen Assenov Christov
Digitally signed by Milen Assenov Christov
Date: 2026.11.23 15:10:26 +02'00'

Milen Christov
Eastern European Electric Company B.V.
/Member of the Management Board/

Yoan Hristov Ivanov
Digitally signed by Yoan Hristov Ivanov
Date: 2026.11.23 14:13:11 +01'00'

Yoan Ivanov
Eastern European Electric Company B.V.
/Member of the Management Board/

HRISTIANA TONCHEVA GEORGIEVA
Digitally signed by HRISTIANA TONCHEVA GEORGIEVA
Date: 2026.11.23 15:20:10 +02'00'

Hristiana Georgieva, ACCA
Eastern European Electric Company B.V.
/Preparer/

INTERIM CONDENSED CONSOLIDATED STATEMENT OF CHANGES IN EQUITY

for the period ended 30 September 2026

		Attributable to the equity holders of the parent company							
		Issued capital	*Share premium*	*Reserve from remeasurement of defined benefit plans*	*Cash flow hedge reserve*	*Retained earnings*	*Total*	*Non-controlling interest*	***Total equity***
	Notes	20	21	22	23			32	
		EUR'000	*EUR'000*	*EUR'000*	*EUR'000*	*EUR'000*	*EUR'000*	*EUR'000*	*EUR'000*
At 1 January 2025		**1**	**45 740**	**(387)**	**(9 216)**	**187 192**	**223 330**	**-**	**223 330**
Profit for the period		-	-	-	-	14 291	**14 291**	**(5)**	**14 286**
Other comprehensive income		-	-	-	97	-	**97**	**-**	**97**
Total comprehensive income		**-**	**-**	**-**	**97**	**14 291**	**14 388**	**(5)**	**14 383**
Decrease in share premium		-	(12 500)	-	-	-	**(12 500)**	**-**	**(12 500)**
Change due to non-controlling interest in subsidiary		-	-	-	-	-	**-**	1	**1**
Transactions with owners		**-**	**(12 500)**	**-**	**-**	**-**	**(12 500)**	**1**	**(12 499)**
Reclassification of cash flow hedge reserve to profit or loss		-	-	-	9 119	-	**9 119**	-	**9 119**
At 30 September 2025		**1**	**33 240**	**(387)**	**-**	**201 483**	**234 337**	**(4)**	**234 333**
At 1 January 2026		**1**	**28 990**	**(1 188)**	**-**	**206 216**	**234 019**	**(8)**	**234 011**
Profit for the period		-	-	-	-	40 155	**40 155**	21	**40 176**
Other comprehensive income		-	-	-	-	-	**-**	-	**-**
Total comprehensive income		**-**	**-**	**-**	**-**	**40 155**	**40 155**	**21**	**40 176**
Increase in share premium		-	5 200	-	-	-	**5 200**	-	**5 200**
Decrease in share premium		-	(4 250)	-	-	-	**(4 250)**	-	**(4 250)**
Transactions with owners		**-**	**950**	**-**	**-**	**-**	**950**	**-**	**950**
Adjustments		**-**	**-**	**-**	**-**	**14**	**14**	**-**	**14**
At 30 September 2026		**1**	**29 940**	**(1 188)**	**-**	**246 385**	**275 138**	**13**	**275 151**

Milen Assenov Christov
Digitally signed by Milen Assenov Christov
Date: 2026.11.23 15:10:40 +02'00'

Milen Christov
Eastern European Electric Company B.V.
/Member of the Management Board/

Yoan Hristov Ivanov
Digitally signed by Yoan Hristov Ivanov
Date: 2026.11.23 14:13:28 +01'00'

Yoan Ivanov
Eastern European Electric Company B.V.
/Member of the Management Board/

HRISTIANA TONCHEVA GEORGIEVA
Digitally signed by HRISTIANA TONCHEVA GEORGIEVA
Date: 2026.11.23 15:20:29 +02'00'

Hristiana Georgieva, ACCA
Eastern European Electric Company B.V.
/Preparer/

INTERIM CONDENSED CONSOLIDATED STATEMENT OF PROFIT OR LOSS BY SUBSIDIARIES
for the period ended 30 September 2026

EUR'000	***Notes***	*30.09.2026*												
		Consolidated	EDG West	Sales	ICT	Trade	Bulgaria	FEPO	BARA	EPC	EPC Electric	EEEC	*Elimination*	*PPA**
Revenue from operating activities	3	**1 178 940**	232 257	602 999	13 661	520 143	17 212	1 195	-	2 801	263	477	(212 068)	-
Expenses of operating activities	4	**(968 940)**	(61 874)	(575 726)	-	(507 566)	-	(223)	-	-	-	-	176 449	-
Gross Operating Profit		**210 000**	**170 383**	**27 273**	**13 661**	**12 577**	**17 212**	**972**	**-**	**2 801**	**263**	**477**	**(35 619)**	**-**
Other revenue	5	**1 896**	2 657	-	-	3	-	-	-	-	-	-	(764)	-
Other income, net	6	**10 479**	3 675	6 700	4	81	28	-	-	686	127	-	(748)	(74)
Other operating expenses	7	**(96 305)**	(82 294)	(13 644)	(9 823)	(4 960)	(15 210)	(187)	(7)	(4 718)	(331)	(922)	35 829	(38)
(Accrued)/Recovered impairment loss on financial assets, net	10	**(1 397)**	(908)	(693)	11	(38)	154	-	-	(19)	-	-	96	-
EBITDA		**124 673**	**93 513**	**19 636**	**3 853**	**7 663**	**2 184**	**785**	**(7)**	**(1 250)**	**59**	**(445)**	**(1 206)**	**(112)**
Financial expenses	8	(34 894)	(3 017)	(271)	(48)	(7 504)	(966)	(1)	-	(262)	-	(25 915)	3 090	-
Financial income	9	6 899	763	3 556	-	2 793	686	-	-	-	-	36 260	(37 159)	-
EBTDA		**96 678**	**91 259**	**22 921**	**3 805**	**2 952**	**1 904**	**784**	**(7)**	**(1 512)**	**59**	**9 900**	**(35 275)**	**(112)**
Depreciation and amortization	12, 13, 27.1.1	**(48 724)**	(42 147)	(75)	(1 766)	(232)	(1 401)	(270)	-	(439)	(1)	(6)	492	(2 879)
EBT		**47 954**	**49 112**	**22 846**	**2 039**	**2 720**	**503**	**514**	**(7)**	**(1 951)**	**58**	**9 894**	**(34 783)**	**(2 991)**
Income tax expenses	11.1	**(7 778)**	(5 215)	(2 284)	(197)	(272)	(53)	(52)	-	-	(6)	-	-	301
Net profit for the period		**40 176**	**43 897**	**20 562**	**1 842**	**2 448**	**450**	**462**	**(7)**	**(1 951)**	**52**	**9 894**	**(34 783)**	**(2 690)**
Attributable to:														
Equity holders of the parent company		**40 155**	**43 897**	**20 562**	**1 842**	**2 448**	**450**	**462**	**(7)**	**(1 951)**	**31**	**9 894**	**(34 783)**	**(2 690)**
Non-controlling interests		**21**	**-**	**-**	**-**	**-**	**-**	**-**	**-**	**-**	**21**	**-**	**-**	**-**

* PPA stands for Purchase Price Allocation under IFRS 3 – Business Combinations. Upon acquisition, the subsidiaries' assets were revalued to their fair values, which are now used as the basis for depreciation in the consolidated financial statements.

For the current financial period in 2026, Energoto EOOD and Electroto EOOD generated results of less than EUR 1 thousand each, thus not visible in the breakdown.

Milen Assenov Christov — Digitally signed by Milen Assenov Christov Date: 2026.11.23 15:10:55 +02'00'

Milen Christov
Eastern European Electric Company B.V.
/Member of the Management Board/

Yoan Hristov Ivanov — Digitally signed by Yoan Hristov Ivanov Date: 2026.11.23 14:13:43 +01'00'

Yoan Ivanov
Eastern European Electric Company B.V.
/Member of the Management Board/

HRISTIANA TONCHEVA GEORGIEVA — Digitally signed by HRISTIANA TONCHEVA GEORGIEVA Date: 2026.11.23 15:20:46 +02'00'

Hristiana Georgieva, ACCA
Eastern European Electric Company B.V.
/Preparer/

INTERIM CONDENSED CONSOLIDATED STATEMENT OF PROFIT OR LOSS BY SUBSIDIARIES
for the period ended 30 September 2025

EUR'000	***Notes***	*30.09.2025*												
		Consolidated	EDG West	Sales	ICT	Trade	Bulgaria	FEPO	BARA	EPC	EPC Electric	EEEC	*Elimination*	*PPA**
Revenue from operating activities	3	918 268	202 091	559 354	10 914	324 687	16 919	1 151	-	3 334	-	806	(200 988)	-
Expenses of operating activities	4	(729 793)	(51 539)	(533 638)	-	(312 718)	-	(198)	-	-	-	-	168 300	-
Gross Operating Profit		**188 475**	**150 552**	**25 716**	**10 914**	**11 969**	**16 919**	**953**	**-**	**3 334**	**-**	**806**	**(32 688)**	**-**
Other revenue	5	1 719	2 477	-	-	-	-	-	-	-	-	-	(758)	-
Other income, net	6	4 273	2 045	2 256	4	55	49	1	-	1 230	-	-	(1 227)	(140)
Other operating expenses	7	(92 380)	(75 289)	(12 269)	(8 010)	(2 968)	(14 802)	(232)	(7)	(5 114)	(12)	(6 227)	32 671	(121)
(Accrued)/Recovered impairment loss on financial assets, net	10	271	955	(516)	14	(172)	-	-	-	10	-	-	(20)	-
EBITDA		**102 358**	**80 740**	**15 187**	**2 922**	**8 884**	**2 166**	**722**	**(7)**	**(540)**	**(12)**	**(5 421)**	**(2 022)**	**(261)**
Financial expenses	8	(41 640)	(3 149)	(1 839)	(50)	(432)	(1 130)	(1)	-	(276)	-	(38 120)	3 357	-
Financial income	9	5 752	2 876	3 745	4	1 540	711	-	-	-	-	2 257	(5 381)	-
EBTDA		**66 470**	**80 467**	**17 093**	**2 876**	**9 992**	**1 747**	**721**	**(7)**	**(816)**	**(12)**	**(41 284)**	**(4 046)**	**(261)**
Depreciation and amortization	12, 13, 27.1.1	**(45 542)**	(39 249)	(63)	(1 631)	(238)	(1 332)	(270)	-	(376)	-	(2)	431	(2 812)
EBT		**20 928**	**41 218**	**17 030**	**1 245**	**9 754**	**415**	**451**	**(7)**	**(1 192)**	**(12)**	**(41 286)**	**(3 615)**	**(3 073)**
Income tax expenses	11.1	**(6 642)**	(4 075)	(1 703)	(129)	(976)	(41)	(25)	-	-	-	-	-	307
Net profit for the period		**14 286**	**37 143**	**15 327**	**1 116**	**8 778**	**374**	**426**	**(7)**	**(1 192)**	**(12)**	**(41 286)**	**(3 615)**	**(2 766)**
Attributable to:														
Equity holders of the parent company		**14 291**	**37 143**	**15 327**	**1 116**	**8 778**	**374**	**426**	**(7)**	**(1 192)**	**(7)**	**(41 286)**	**(3 615)**	**(2 766)**
Non-controlling interests		**(5)**	**-**	**-**	**-**	**-**	**-**	**-**	**-**	**-**	**(5)**	**-**	**-**	**-**

* PPA stands for Purchase Price Allocation under IFRS 3 – Business Combinations. Upon acquisition, the subsidiaries' assets were revalued to their fair values, which are now used as the basis for depreciation in the consolidated financial statements.

Milen Assenov Christov
Digitally signed by Milen Assenov Christov
Date: 2026.11.23 15:11:09 +02'00'

Milen Christov
Eastern European Electric Company B.V.
/Member of the Management Board/

Yoan Hristov Ivanov
Digitally signed by Yoan Hristov Ivanov
Date: 2026.11.23 14:14:00 +01'00'

Yoan Ivanov
Eastern European Electric Company B.V.
/Member of the Management Board/

HRISTIANA TONCHEVA GEORGIEVA
Digitally signed by HRISTIANA TONCHEVA GEORGIEVA
Date: 2026.11.23 15:21:04 +02'00'

Hristiana Georgieva, ACCA
Eastern European Electric Company B.V.
/Preparer/

1. General information and nature of operations

Organisation

The Group consists of Eastern European Electric Company B.V. ("Parent Company"; “Issuer”; “EEEC B.V.”) and its subsidiaries Electrohold Bulgaria EOOD, Electrohold Sales EAD, Electrodistribution Grid West EAD (EDG West EAD), Electrohold Trade EAD, Electrohold ICT EAD (100% subsidiary of EDG West EAD), Free Energy Project Oreshets EOOD, Electrohold EPC EOOD (100% subsidiary of Electrohold Bulgaria EOOD), EPC Electric OOD (60% subsidiary of Electrohold EPC EOOD), Electroto EOOD (100% subsidiary of Electrohold Sales EAD), Energoto EOOD (100% subsidiary of Electrohold Sales EAD) and BARA Group EOOD.

Eastern European Electric Company B.V. is a sub-holding of Eurohold Bulgaria AD, consolidating the part of the energy business of Eurohold Group related to electricity distribution, supply and trading within.

On 15 July 2021 100% of the Parent Company’s shares were contributed by Eastern European Electric Company II B.V. to Eastern European Electric Company III B.V. As at 30 September 2026, the sole shareholder of the Parent Company is Eastern European Electric Company III B.V.

The objectives of the Parent Company are to act as a holding and finance company. It has acquired the following subsidiaries through initial acquisition and buy-outs:

- CEZ Razpredelenie Bulgaria AD - currently renamed Electrodistribution Grid West EAD (EDG West EAD) / Electrorazpredelitelni mreji Zapad EAD (ERM Zapad EAD), including its subsidiary CEZ Information and Communication Technologies Bulgaria EAD (currently renamed Electrohold ICT EAD).
- CEZ Electro Bulgaria AD - currently renamed Electrohold Sales EAD.
- CEZ Trade Bulgaria EAD - currently renamed Electrohold Trade EAD.
- CEZ Bulgaria EAD - currently renamed Electrohold Bulgaria EOOD.
- Free Energy Project Oreshets EAD - currently renamed Free Energy Project Oreshets EOOD.
- Bara Group EOOD (non-operational).

Ownership and management

The Group is part of the economic group of Eurohold Bulgaria AD (Eurohold), which is a public joint stock company established by virtue of article 122 of the Public Offering of Securities Act and article 261 of the Commerce Act under UIC 175187337 with seat and registered address at city of Sofia, Iskar Region, 43 Christopher Columbus Blvd. Eurohold’s equity instruments are listed on Bulgarian Stock Exchange and Warsaw Stock Exchange, with pending listing on Frankfurt Stock Exchange.

Eurohold Bulgaria AD is controlled by Starcom Holding AD – a joint stock company, established and existing under the laws of the Republic of Bulgaria, registered in The Commercial Register at the Registry Agency with UIC 121610851 with seat and management address: Republic of Bulgaria, 1592 Sofia, 43 Christopher Columbus Blvd.

Starcom Holding AD owns 76.44% participation in share capital of Eurohold Bulgaria AD as at 30 September 2026 (52.75% as at 31.12.2025).

Majority shareholder of Starcom Holding AD: AH Capital Establishment, Liechtenstein.

Ultimate Parent Company: Red Peak Foundation, Liechtenstein.

Management Board

As at 30.09.2026, the Management Board of the Company consists of the following members: Milen Christov and Yoan Ivanov.

No changes in the way of representation have been made. The Parent Company is represented by each of the two members of the Management Board acting jointly.

Securities

EASTERN EUROPEAN ELECTRIC COMPANY B.V. issued EUR 500 million Guaranteed Secured Notes with five-year maturity (15 May 2030), secured, offered and sold under Regulation S/Rule 144A, with a fixed annual coupon of 6.500% (the "**Bond**"). Bond notes are listed on Luxembourg Stock Exchange, market segment Euro MTF under ISIN XS3073101712 for Regulation S (Non-U.S.) and under ISIN XS3073621552 for Rule 144A (U.S.).

Credit ratings

The Issuer has been rated Ba2 (outlook stable) by Moody's Deutschland GmbH ("**Moody's**") and BB (outlook stable) by Fitch Ratings Ireland Limited ("**Fitch**"). Both ratings were affirmed in the course of the regular annual reviews conducted in the second quarter of 2026.

Parent company

Eastern European Electric Company B.V. ("the Parent Company") is established on 26 July 2019 and existing under the laws of the Netherlands in the legal form Besloten Vennootschap (comparable with Private Limited Liability Company) with registered address Kerkstraat 134 A, 1017 GP, Amsterdam, the Netherlands.

The objectives of the Parent Company are to act as a holding and finance company.

Equity

On 15 July 2021 100% of the Parent Company's shares were contributed by Eastern European Electric Company II B.V. to Eastern European Electric Company III B.V as non-obliged share premium contribution (niet-bedongen agiostorting). As at 31 December 2025 and as at 30 September 2026, the sole shareholder of the Parent Company is Eastern European Electric Company III B.V.

As at 30 September 2026, the share capital of the Parent Company is EUR 1 thousand, divided into 1 000 ordinary shares of EUR 1 each, 100% of which are owned by Eastern European Electric Company III B.V.

The share premium reserve of the Parent Company was increased several times by cash contributions from Eastern European Electric Company III B.V.:

- On 23 July 2021 - EUR 160 600 thousand.
- On 18 November 2021 - EUR 14 918 thousand.
- On 17 March 2022 - EUR 9 082 thousand.
- On 27 June 2022 - EUR 650 thousand.
- On 18 August 2022 - EUR 4 200 thousand.
- On 18 March 2024 - EUR 600 thousand.
- On 9 December 2024 - EUR 4 300 thousand.
- On 24 June 2026 - EUR 5 200 thousand.

The share premium reserve of the Parent Company was decreased several times by cash distributions to Eastern European Electric Company III B.V.:

- On 13 June 2023 - EUR 54 500 thousand.
- On 18 September 2023 - EUR 520 thousand.
- On 16 November 2023 - EUR 590 thousand.
- On 23 May 2024 - EUR 93 000 thousand.
- On 3 January 2025 - EUR 300 thousand.
- On 21 May 2025 - EUR 12 200 thousand.
- On 10 December 2025 – EUR 4 250 thousand.
- On 11 June 2026 - EUR 4 250 thousand.

Debt

Refinancing the funding for acquisition of subsidiaries

On 3 June 2024 the Parent Company as a borrower entered into Senior Facilities Agreement with, among others, The Bank of New York Mellon, London Branch as agent, for the purpose of: refinancing the Senior Facilities Agreement dated 21 July 2021; for direct or indirect refinancing, in whole or in part, of the Holdco Facility Agreement, dated 21 July 2021 (with borrower EEEC II B.V.) and capital expenditures of EDG West. The total amount available for the Parent Company under the SFA is EUR 460 000 000, structured in three facilities. All available commitments were fully utilised on 10.06.2024.

The debt was fully repaid on 20.05.2025 by proceeds from the bond issue.

Bond issuance

On 15 May 2025 Eastern European Electric Company B.V. issued Guaranteed Secured Notes amounting to EUR 500 000 000 with five-year maturity (15 May 2030), secured, offered and sold under Regulation S/Rule 144A, with a fixed annual coupon of 6.500%. The leading American investment bank J.P. Morgan was the bookrunner and lead manager of the issue, as well as an advisor on the ratings process. The strong demand resulted in final books exceeding EUR 1.4 billion, representing a 2.8x oversubscription. On 8 May 2025 the bonds were allocated to over 60 investors from 17 countries. The settlement took place on 15 May 2025.

The net proceeds, after deduction of commissions and expenses, are used to repay the Senior Facility Agreement dated 3 June 2024 and related expenses in full, for general corporate purposes and to make certain payments as dividends in connection with scheduled and early prepayments of a portion of the HoldCo Facility dated 3 June 2024 of Eastern European Electric Company II B.V. Bond notes are listed on Luxembourg Stock Exchange, market segment Euro MTF under ISIN XS3073101712 for Regulation S (Non-U.S.) and under ISIN XS3073621552 for Rule 144A (U.S.).

Club loan

On 28 May 2025 EEEC B.V. entered into a Facility Agreement with a total limit of EUR 9 119 200 towards refinancing or otherwise discharging the outstanding indebtedness in connection with the hedging agreements. The facility bears interest of 6M EURIBOR + 2.4%/min. 2.4%, 3-year duration and semi-annual payments of principal and interest. The limit was fully utilized on 30.05.2025. Outstanding obligations amount to EUR 6 182 thousand.

Overdraft limits

The subsidiaries Electrodistribution Grid West, Electrohold Sales and Electrohold Trade have in total available overdrafts limit of EUR 70 000 000 and limits for issuance of bank guarantees (constituting conditional bank loans) of EUR 49 500 000. There are no outstanding obligations.

Facility of the distribution company

Electrodistribution Grid West has outstanding obligation of EUR 10 759 thousand to European Bank for Reconstruction and Development under a Facility Agreement dated 02.11.2016.

Group structure

As at 30 September 2026, the consolidated financial statement of the Group includes:

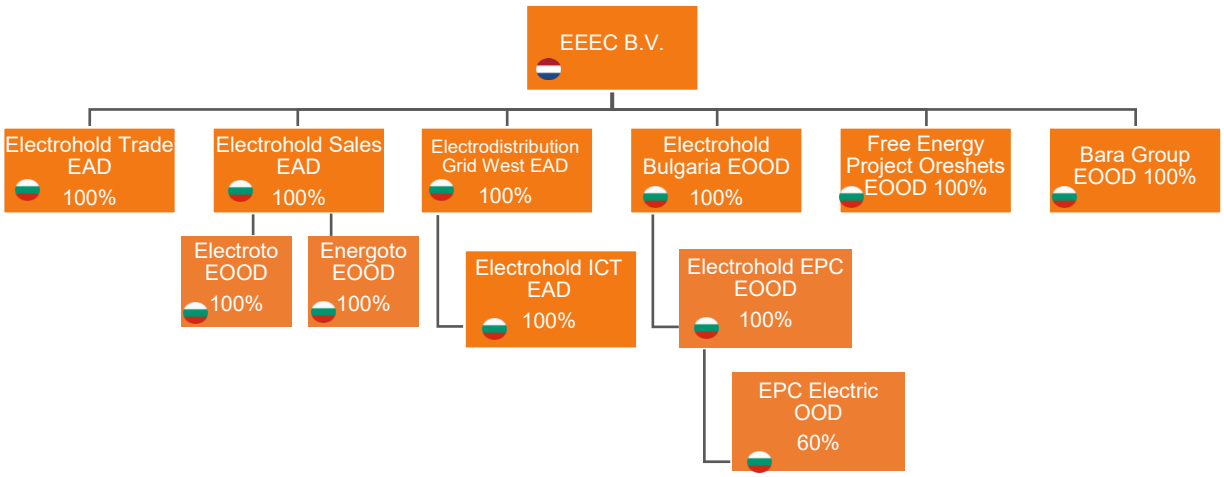

Military actions in Ukraine

On 24 February 2022, Russian forces commenced an armed conflict against Ukraine, which, in conjunction with sanctions imposed by governments in response, has led to significant volatility and disruption in the global credit markets and the global economy. In particular, the ongoing conflict has resulted in increased energy prices globally, which have, in turn, impacted tariffs charged by the Group and the policy stance of the Government and EWRC.

The degree to which the conflict between Ukraine and Russia may ultimately continue to affect the Group is uncertain. The ongoing geopolitical tensions related to the war in Ukraine, as well as any escalations of the conflict and the potential imposition of further economic or other sanctions, could negatively affect global macroeconomic conditions and conditions in Bulgaria.
The Group's management considers the situation to be highly dynamic, with the possibility of a negative impact on the Group's operations, especially on the carrying amounts of the Group's assets, which in the financial statements have been determined under a number of judgements and assumptions, taking into account the most reliable information available, at the date of making them.

Effects on the items in the financial statements

The Group’s management has not identified areas in the financial statements on which the war has direct and material impact and effects, incl. with respect to the measurement of individual assets and liabilities.

2. Basis of preparation

The interim condensed consolidated financial statements have been prepared in accordance with International Accounting Standard (IAS) 34 Interim Financial Reporting.

In preparing these interim condensed consolidated financial statements, the same accounting policies, accounting techniques and calculation methods and basic assumptions have been applied as in the last audited consolidated annual financial statements for 2025.

The interim condensed consolidated financial statements for the period ending 30 September 2026 should be read in conjunction with the audited consolidated annual financial statements for the year ended 31 December 2025, prepared in accordance with all International Financial Reporting Standards (IFRS) developed and published by the International Accounting Standards Board (IASB) and adopted by the European Union (IFRS adopted by the EU). For the purposes of paragraph 1 (8) of the Supplementary Provisions of the Accounting Act applicable in Bulgaria, the term "IFRS adopted by the EU" means International Accounting Standards (IAS) adopted in accordance with Regulation (EC) 1606/2002 of the European Parliament and the Council.

As of 01.01.2026, the official currency in the Republic of Bulgaria is euro with an exchange rate of 1 EUR = 1.95583 BGN following the approval of Bulgaria's accession to the euro area by European Union for Economic and Financial Affairs (ECOFIN).

The Group's functional currency has changed from the Bulgarian lev to the euro with effect from 1 January 2026. As the change reflects an alteration in the underlying economic environment rather than a voluntary change in accounting policy, it has been applied prospectively in accordance with IAS 21 The Effects of Changes in Foreign Exchange Rates. All assets, liabilities, and equity items have been translated from BGN into EUR at the fixed conversion rate of 1.95583, and comparative figures have been restated at the same rate solely for presentation purposes, as required by the redenomination.

In compliance with the applicable Bulgarian legislation governing the introduction of the euro, any cumulative exchange differences and rounding effects arising on the redenomination of share capital, reserves, and other equity components from Bulgarian leva into euro at the fixed conversion rate of EUR 1 = BGN 1.95583 have been transferred to retained earnings as of 1 January 2026. The reclassification has no effect on total equity and does not give rise to any gain or loss recognised in profit or loss or other comprehensive income.

Management is responsible for the preparation and fair presentation of the information in these consolidated financial statements.

The consolidated financial statements are prepared under the going concern principle.

For the financial period in 2026, Energoto EOOD and Electroto EOOD generated results of less than EUR 1 thousand each, which are immaterial and do not influence the consolidated results of the Group.

Comparative data

In these interim condensed consolidated financial statements, the Group presents information for one comparative period. Where necessary, comparative data is reclassified (and restated) for the purpose of achieving comparability in view of the current year presentation changes.

2.1. Statement of compliance with IFRS, as adopted by the EU

These interim condensed consolidated financial statements of the Group have been prepared in accordance with International Financial Reporting Standards (IFRS) as issued by the International Accounting Standards Board (IASB) and approved by the European Union (IFRS, as adopted by the EU). The term “IFRS, as adopted by the EU” has the meaning of paragraph 1, subparagraph 8 of the Additional provisions of Bulgarian Accountancy Act, which is International Accounting Standards (IAS) adopted in accordance with Regulation (EC) 1606/2002 of the European Parliament and of the Council.

2.2. Going concern

At the date of preparation of these interim condensed consolidated financial statements, management has made an assessment of the Group's ability to continue as a going concern based on available information for the foreseeable future. After making enquiries, the management (Board of directors) have a reasonable expectation that the Group has adequate resources to continue in operational existence for the foreseeable future. Accordingly, they continue to adopt the going concern basis in preparing the interim consolidated financial statements.

2.3. New or revised standards or interpretations

New standards, amendments and interpretations to existing standards as at 1 January 2026

The Group has adopted the following new standards, amendments and interpretations to IFRS issued by the International Accounting Standards Board and endorsed by EU, which are relevant to and effective for the Group's consolidated financial statements for the interim period beginning 1 January 2026, but do not have a significant impact on the Group’s consolidated financial results or consolidated financial position:

- **Amendments to IFRS 9 and IFRS 7 – Classification and Measurement of Financial Instruments, effective from 1 January 2026, adopted by the EU.**

The amendments clarify the requirements for the classification and measurement of financial instruments, in particular the assessment of contractual cash flow characteristics of financial assets with environmental, social and governance (ESG)-linked features, non-recourse features, and contractually linked instruments. They also introduce an accounting policy option to derecognise a financial liability settled through an electronic payment system before the settlement date when specified conditions are met, together with additional disclosure requirements for equity investments designated at fair value through other comprehensive income and for contractual terms that may alter the timing or amount of contractual cash flows.

- **Annual Improvements – Volume 11 (applicable for annual periods beginning on or after 1 January 2026, endorsed in the EU).**

The Annual Improvements to IFRS Accounting Standards – Volume 11 introduce narrow-scope clarifications and minor corrections to IFRS 1 First-time Adoption of International Financial Reporting Standards, IFRS 7 Financial Instruments: Disclosures, IFRS 9 Financial Instruments, IFRS 10 Consolidated Financial Statements, and IAS 7 Statement of Cash Flows.

- **Amendments to IFRS 9 and IFRS 7 Contracts Referencing Nature-dependent Electricity (applicable for annual periods beginning on or after 1 January 2026, endorsed in the EU).**

The amendments provide additional application guidance to assist entities in determining whether contracts to purchase electricity generated from nature-dependent sources (such as wind or solar) qualify for the "own-use" exemption under IFRS 9 and introduce specific hedge accounting requirements for such contracts. They also introduce new disclosure requirements under IFRS 7 to enable users to understand the effect of these contracts on the Company's financial performance and future cash flows.

2.4. Standards, amendments and interpretations to existing standards that are not yet effective or have not been adopted early by the Group

At the date of authorisation of these financial statements, certain new standards, amendments and interpretations to existing standards have been issued, but are not effective or adopted by the EU for the financial year beginning on 1 January 2026 and have not been applied early by the Group. They are not expected to have a material impact on the Group’s financial statements, except for IFRS 18 Presentation and Disclosure in Financial Statements, which will change the structure and presentation of the statement of profit or loss through the introduction of mandatory subtotals (operating profit and profit before financing and income tax), the classification of income and expenses into operating, investing, and financing categories, and new disclosure requirements for management-defined performance measures (MPMs). Management anticipates that all relevant pronouncements will be adopted in the Group’s accounting policies for the first period beginning after the effective date of the pronouncement.

A list of the changes in the standards is provided below:

- **IFRS 18 Presentation and disclosure in financial statements, effective from 1 January 2027, adopted by the EU.**
- **IFRS 19 Subsidiaries without Public Accountability: Disclosures, effective from 1 January 2027, adopted by the EU.**
- **Amendments to IAS 21 The effects of changes in foreign exchange rates: Translation into a Hyperinflationary Presentation Currency, effective from 1 January 2027, has not yet been adopted by the EU.**
- **IFRS 20 Regulatory Assets and Regulatory Liabilities, effective from 1 January 2029, not adopted by the EU.**

2.5. Material accounting policy information

2.5.1. Overall considerations

The material accounting policy information that has been used in the preparation of these interim consolidated financial statements are summarized below.

The Group's interim consolidated financial statements have been prepared on an accruals basis and under the historical cost convention except for the revaluation of properties, investments and derivatives. The measurement bases are more fully described in the accounting policies below.

The interim consolidated financial statements are presented in euro (EUR), which is also the functional currency of the Parent Company. All amounts are presented in thousand euro (EUR'000) (including comparative information for 2025), except for earnings per share or unless otherwise stated.

It should be noted that accounting estimates and assumptions are used for the preparation of the consolidated financial statements. Although these estimates are based on management's best knowledge of current events and actions, actual results may ultimately differ from those estimates.

2.5.2. Presentation of consolidated financial statements

The interim consolidated financial statements have been presented in accordance with IAS 1 "Presentation of Financial Statements". The Group has elected to present the consolidated statement of profit or loss and other comprehensive income as a single statement.

2.5.3. Basis for consolidation

The interim consolidated financial statements comprise the financial statements of Parent Company and its subsidiaries as at 30 September 2026.

The Group (investor) controls an investee if and only if the investor owns all of the following:
a) power over the investee (i.e., existing rights that give it the ability to direct the relevant activities of the investee);
b) exposure, or rights, to variable returns from its involvement with the investee, as well as
c) the ability to use its power over the investee to affect the amount of the investor's returns.

Usually there is a presumption that a majority of the voting rights results in control over investee. To support this presumption and when the Group has less than a majority of the rights of an investee, the Group considers all relevant facts and circumstances in assessing whether it has power over an investee including:
a) contractual arrangements with the other vote holders;
b) rights arising from other contractual arrangements;
c) Group's voting rights or potential voting rights.

The consolidation of subsidiaries starts on the date on which the Group obtains control and continues until the date when the control is lost. Assets, liabilities, revenue and expenses of a subsidiary, acquired or disposed during the reporting period are included in the consolidated financial statements on the date on which the Group acquires control till the date on which the Group ceases to control the subsidiary. In the consolidated financial statements, the subsidiaries' consolidated financial statements are consolidated using the "full consolidation" method, in order, by applying an accounting policy that is unified for major items. The Parent Company's investments are eliminated against the equity interest of the subsidiaries at the acquisition date. Intragroup operations and estimates are completely eliminated.

Amounts reported in the financial statements of subsidiaries have been adjusted where necessary to ensure consistency with the accounting policies adopted by the Group.

The owned shares by the Parent Company and subsidiaries' main fields of activities are represented as follows:

Name	Hereinafter referred to as	Principal activities	Country of incorporation	Number shares	Ownership %
Eastern European Electric Company B.V.	**EEEC** **Parent Company**	**Finance and holding company**	**Netherlands**		
Electrohold Bulgaria EOOD	ELH Bulgaria	Business services, purchasing and sale of equipment and materials as well as any other activity, not prohibited by law.	Bulgaria	138 187*	100%
Electrohold Sales EAD	ELH Sales	Public Supply of electricity according to the Energy Act (EA) after obtaining and in compliance with the conditions of the obtained license for Public Supply of electricity and every other activity, not prohibited by law.	Bulgaria	5 000	100%
.Electrodistribution Grid West EAD (EDG West EAD)	EDG West	Operation of the electricity distribution grid as an aggregation of Medium Voltage, Low Voltage and High Voltage power lines and facilities, used for transmission and distribution of electricity to the end customers connected to the Company's electricity distribution grids (EDG) within the territory where the Company operates, subject to the presence and maintenance of a valid license for electricity distribution for the respective area.	Bulgaria	1 928 000	100%
Electrohold Trade EAD	ELH Trade	Trade in electricity, heating power, gas fuels, and all other types of energy sources after obtaining of the relevant license, in case such a license is required; Research, consulting, designing, financing and construction of energy projects, delivery of energy efficient services, delivery of services under contracts with guaranteed results – ESCO contracts, construction and assembly works, repair works, delivery of materials and equipment.	Bulgaria	500 000	100%
Electrohold ICT EAD	ELH ICT	Trade in integrated systems in the field of information and communication technologies, provision of information, communication and	Bulgaria	60 000	100%

Name	Hereinafter referred to as	Principal activities	Country of incorporation	Number shares	Ownership %
		technological services, as well as other technical and consulting services.			
Free Energy Project Oreshets EOOD	FEPO	Production, construction and operation of power systems and power plants, related to renewable energy resources; production of and trading with energy from renewable resources; purchase of real estate for the purposes of construction, lease or sale; construction and entrepreneur services; marketing researches, consultancy; import and export; commercial representation and intermediary services of Bulgarian and foreign natural persons and legal entities, as well as any other activity non-prohibited by law.	Bulgaria	112*	100%
Electrohold EPC EOOD	ELH EPC	Preparation of investment projects, execution of construction and assembly activities, supply, purchase /sale of materials /goods, consultations, and assistance in preparation of tendering procedures documentation, as well as any other activity, not prohibited by law.	Bulgaria	206*	100%
EPC Electric OOD	EPC Electric	Pre-project and design studies, design and engineering of energy infrastructure sites. Construction, reconstruction and construction and repair activities of energy infrastructure sites. Project management, technology and project management, technical control and implementation management of energy infrastructure sites, consulting activities, as well as any other commercial activity that is not expressly prohibited by law.	Bulgaria	300	60%
Energoto EOOD	Energoto	Marketing and advertising services and consultancy, online and digital services, commercial representation and intermediation, commission agency activities; Trading in electrical energy and any other	Bulgaria	10	100%

Name	Hereinafter referred to as	Principal activities	Country of incorporation	Number shares	Ownership %
		types of energy carriers, subject to obtaining the relevant license where such is required; management of energy assets; research, consultancy, design, financing, and construction of energy facilities; provision of energy efficiency services; performance of services under energy performance contracts with guaranteed results(ESCO contracts);supply of materials and equipment; as well as any other activities not prohibited by law.			
Electroto EOOD	Electroto	Consulting and advertising activities, including the design and production of indoor and outdoor advertising, graphic design, web design, and publishing activities; Marketing activities, marketing and sociological research, development of software products, as well as representation, intermediation, and agency activities; Purchase and sale of goods in their original, processed, and refined form in the country and abroad; as well as all other commercial activities not prohibited by law.	Bulgaria	10	100%
BARA Group EOOD (non-functional)	BARA	Construction, maintenance and exploitation of energy sites for production of electric power from renewable energy sources and alternative energy sources (after obtaining of the respective licence and permits); electric power production from renewable energy sources and alternative energy sources (after obtaining of the relevant licenses and permits), internal and external trade, purchase and sale of real estate, construction, commercial representation, intermediation and agency of local and foreign individuals and legal entities; transport and forwarding activities, as well as any other activities not prohibited by law	Bulgaria	500	100%

**138 187 share with nominal value of EUR 0.74 are the equivalent of 200 000 shares with a nominal*

value of 1 (one) Bulgarian lev before the adoption of the EURO as currency in Bulgaria as at 01.01.2026

**112 share with nominal value of EUR 731,33 are the equivalent of 1 602 shares with a nominal value of 100 (one hundred) Bulgarian lev before the adoption of the EURO as currency in Bulgaria as at 01.01.2026*

**206 share with nominal value of EUR 12.41 are the equivalent of 500 shares with a nominal value of 10 (ten) Bulgarian lev before the adoption of the EURO as currency in Bulgaria as at 01.01.2026*

Non-controlling interests, presented as part of equity, represent the portion of a subsidiary's profit and loss and net assets that is not held by the Group. The Group attributes total comprehensive income or loss of subsidiaries between the owners of the parent and the non-controlling interests based on their respective ownership interests.

When the Group ceases to have control of a subsidiary, any retained interest in the entity is remeasured to its fair value, with the change in carrying amount recognized in profit or loss. The fair value is the initial carrying amount for the purposes of subsequently accounting for the retained interest as an associate, joint venture or financial asset. In addition, any amounts previously recognized in other comprehensive income in respect of that entity are accounted for as if the Group had directly disposed of the related assets or liabilities (i.e. reclassified to profit or loss or transferred directly to retained earnings as specified by applicable IFRSs).

The profit or loss on disposal is calculated as the difference between:

i) the aggregate of the fair value of the consideration received and the fair value of any retained interest and

ii) ii) the previous carrying amount of the assets including goodwill and liabilities of the subsidiary and any non-controlling interest.

2.5.4. Business combinations

Business combinations are accounted for using the acquisition method. The consideration transferred by the Group to obtain control of a subsidiary is calculated as the sum of the acquisition-date fair values of assets transferred, liabilities incurred, and the equity interests issued by the Group. The consideration transferred includes the fair value of any asset or liability resulting from a contingent consideration arrangement. Acquisition-related costs are expensed as incurred.

The acquisition method involves the recognition of the acquiree's identifiable assets and liabilities, including contingent liabilities, regardless of whether they were recorded in the financial statements prior to acquisition. On initial recognition, the assets and liabilities of the acquired subsidiary are included in the consolidated statement of financial position at their fair values, which are also used as the bases for subsequent measurement in accordance with the Group's accounting policies.

On an acquisition-by-acquisition basis, the Group recognizes any non-controlling interest in the acquiree that is present ownership interests and entitles their holders to a proportionate share of the entity’s net assets in the event of liquidation either at fair value or at the non-controlling interest’s proportionate share of the acquiree’s net assets.

Goodwill is stated after separate recognition of identifiable intangible assets. It is calculated as the excess of the sum of a) fair value of consideration transferred, b) the recognized amount of any non-controlling interest in the acquiree and c) acquisition-date fair value of any existing equity interest in the acquiree, over the acquisition-date fair values of identifiable net assets. If the fair value of any identifiable net assets exceeds the sum calculated above, the excess amount (i.e. gain on a bargain purchase) is recognized in profit or loss immediately.

When a business combination is achieved in stages, the Group’s previously held equity interest in the acquire is remeasured to fair value at the acquisition date (i.e. the date when the Group obtains control) and the resulting gain or loss, if any, is recognized in profit or loss. Amounts arising from interests in the acquiree prior to the acquisition date that have been previously recognized in other comprehensive income are reclassified to profit or loss where such treatment would be appropriate if the interest were disposed of.

Any contingent consideration to be transferred by the acquirer is measured at fair value at the acquisition date and included as part of the consideration transferred in a business combination. Subsequent changes to the fair value of the contingent consideration, which is deemed to be an asset or liability, is recognized in accordance with IFRS 9 “Financial Instruments” either in profit or loss or as a change to other comprehensive income. If the contingent consideration is classified as equity, it is not remeasured until it is finally settled within equity. Changes in the fair value of the contingent consideration that qualify as measurement period adjustments are adjusted retrospectively, with corresponding adjustments against goodwill.

2.5.5. Goodwill

Goodwill represents the future economic benefits arising from a business combination that are not individually identified and separately recognized. Goodwill is carried at cost less accumulated impairment losses. For the purposes of impairment testing, goodwill is allocated to each of the Group’s cash-generating units (or groups of cash-generating units) that is expected to benefit from the synergies of the combination, irrespective of whether other assets or liabilities of the acquiree are assigned to those units. Refer to note 2.5.17 for a description of impairment testing procedures.

On disposal of the relevant cash-generating unit, the attributable amount of goodwill is included in the determination of the profit or loss on disposal.

2.5.6. Transactions with non-controlling interest

Changes in the Group’s ownership interests in subsidiaries that do not result in the Group losing control over the subsidiaries are treated as transactions with equity owners of the Group. The carrying amounts of the Group’s interests and the non-controlling interests are adjusted to reflect the changes in their relative interests in the subsidiaries. Any difference between the amount by which the non-controlling interests are adjusted and the fair value of the consideration paid or received is recognized directly in equity and attributed to owners of the Parent Company.

2.5.7. Foreign currency translation

The interim condensed consolidated financial statements are presented in euro (EUR), which is the Group’s functional and presentation currency. Transactions in foreign currencies are initially recorded in the functional currency rate ruling at the date of the transaction. Monetary assets and liabilities denominated in foreign currencies are retranslated on a monthly basis by applying the exchange rate published by the Bulgarian National Bank for the last working day of the respective month. All exchange rate differences are recognised in the statement of comprehensive income. Non-monetary assets and liabilities that are valued at historical acquisition cost in a foreign currency are translated to the functional currency at the exchange rate as at the dates of initial transaction (acquisition).

The Group's functional currency has changed from the Bulgarian lev to the euro with effect from 1 January 2026. As the change reflects an alteration in the underlying economic environment rather than a voluntary change in accounting policy, it has been applied prospectively in accordance with IAS 21 The Effects of Changes in Foreign Exchange Rates. All assets, liabilities, and equity items have been translated from BGN into EUR at the fixed conversion rate of 1.95583, and comparative figures have been restated at the same rate solely for presentation purposes, as required by the redenomination.

On disposal of a foreign operation, the related cumulative translation differences recognized in equity are reclassified to profit or loss and are recognized as part of the gain or loss on disposal.

Goodwill and fair value adjustments arising on the acquisition of a foreign entity have been treated as assets and liabilities of the foreign entity and translated into EUR at the closing rate.

2.5.8. Revenue

The Group’s usual income is for the activities disclosed in Note 3.

Recognition of revenue from contracts with customers

The Group’s revenue is recognised when control over the goods and/or services promised in the *contract with the customer* is transferred to the customer. Control is transferred to the customer upon satisfaction of the contractual performance obligations through transfer of the promised goods and/or provision of the promised services.

Measurement of contracts with customers

The Group accounts for a contract with a customer only if upon its enforcement:
a. it has commercial essence and rationale;
b. the parties to the contract have approved the contract (in writing, orally or in accordance with other customary business practices) and are committed to perform it;
c. each party's rights can be identified;
d. the payment conditions can be identified; and
e. it is probable that the Group will collect the consideration to which it is entitled upon performing its performance obligations. In evaluating whether collectability of an amount of consideration is probable, the Group considers all relevant facts and circumstances of the transaction, including past experience, customary business practices, published rules and declarations made by the Group, collaterals and possibilities for satisfaction.

A contract for which any of the above criteria has not yet been met is subject to new assessment in each reporting period. The consideration received under such contracts shall be recognised as payable (*contract liability*) in the consolidated statement of financial position, until: a. all criteria for recognizing a contract with a customer are met; b. the Group meets its performance obligations and has received the whole or almost the whole remuneration (which is not recoverable); and/or c. when the contract is terminated, and the remuneration received is not recoverable.

Upon the initial measurement of its contracts with customers, the Group makes additional analysis and judgement whether two or more contracts should be combined and accounted for as a single contract, respectively whether the products and/or services promised in each separate and/or combined contract should be accounted for as a single and/or multiple performance obligation(s).

Each promise to transfer goods and/or services which are distinct (in nature and in the context of the contract) of essentially the same nature and the same model of transfer to the customer is accounted for as a separate performance obligation. Each promise to transfer a series of distinct goods and/or services of essentially the same nature and the same model of transfer to the customer is accounted for as a separate performance obligation.

The Group recognises revenue for *each separate performance obligation* at the level of *individual contracts with customers*, by analysing the type, term and conditions of each particular contract. For contracts with similar features, revenue is recognised on a portfolio basis, only if their grouping into a portfolio would not have a materially different impact on the consolidated financial statements.

Measurement of revenue under contracts with customers

Revenue is measured based on the *transaction price* determined for each contract.

The transaction price is the amount of consideration to which an entity expects to be entitled, excluding amounts collected on behalf of third parties. Upon determining the transaction price, the Group takes into consideration the contractual conditions and its customary business practices, including the impact of variable consideration, the existence of a significant financing component in the contract, non-cash consideration, consideration payable to the customer (if any). In contracts with more than one performance obligations, the transaction price is allocated between each performance obligation based on the standalone selling prices of each good and/or service determined based on one of the methods permitted under IFRS 15, priority being given to the method of "observable selling prices".

*The change in the scope or price (*or both) of the contract is accounted for as a separate contract and/or as part of the existing contract, depending on whether the change is related to the addition of goods and/or services which are distinct, and on the price determined for them. Depending on that:

a) the Group accounts for a contract modification as a separate contract if the scope of the contract increases because of the addition of promised goods or services that are
distinct, and the price of the contract increases by an amount of consideration that reflects the entity's stand-alone selling prices of the additional promised goods and/or services;

b) the Group accounts for the contract modification as if it were a termination of the existing contract and the creation of a new contract (future application), if the remaining goods and/or services are distinct from the goods and/or services transferred before the contract modification, but the change in the contract price does not reflect the standalone selling price of the goods and/or services added;

c) the Group accounts for the contract modification as if it were a part of the existing contract

(cumulative adjustment) if the remaining goods and/or services are not distinct and, therefore, form part of a single performance obligation that is partially satisfied.

Performance obligations under contracts with customers

The revenue generated by the subsidiaries as follow:

- Revenue from the sale of electricity.
- Revenue from construction services for building energy installations.
- Services for access to and transmission along the electricity distribution grid.
- Services for the connection of new customers to the electricity distribution grid.
- Other services - services for survey, repair and maintenance of the electricity distribution grid and commercial metering devices.
- Information, communication and technological services (ICT services).
- Production of electricity.

The Parent Company and the subsidiaries have concluded that they act as principals in their contracts with customers, unless explicitly stated otherwise, since they usually control the goods and services prior to their control to the customers.

Principal vs. agent, net or gross presentation

Electrodistribution Grid West provides services for access to the high-voltage electricity grid (HV) and transmission along the high-voltage electricity grid (HV), as well as the services for collecting a fee for access to the electricity distribution grid for producers of energy from renewable sources, which is payable by solar and wind energy producers connected to the electricity transmission and electricity distribution grid. With respect to these services, the subsidiary has concluded that it does not control the services before, during and after their provision to the customers and its obligation is rather to collect the amounts due by customers on behalf of a third party (the Electricity System Operator – ESO), which is legislatively regulated. Therefore, the Parent Company has decided to present the revenue and costs from these transactions net in the consolidated statement of comprehensive income.

Electrohold ICT has concluded that it is acting as an agent for the services it is providing under a contract to develop a data model (DLMS/COSEM DATA MODEL) to EDG West EAD's Automatic Meter Reading (AMR) remote metering system. For this service, Electrohold ICT EAD considers that it is acting as an agent as it is more likely to arrange for a third party to carry out the work and provide the service.

Electrohold Sales in accordance with the legislation applicable until 30 June 2025, was required to purchase electricity from RES producers with installed capacity of up to 0.5 MW, which it subsequently had to sell to “National Electric Company” EAD (“NEK”).

For these sales, the company determined that it did not control the goods before they were transferred to NEK and was not able to direct the use of the goods or obtain substantially all of their benefits. Therefore, the Company concluded that it acted as an agent in these transactions.

As of 1 July 2025, following legislative amendments, the Company is required to realise the purchased electricity from RES producers with installed capacity up to 0.5 MW on the organised electricity exchange, day-ahead market segment, through a separate registration.

The Company has determined that it acts as a principal when fulfilling these contracts, because:

- it controls the electricity before it is transferred to the exchange.
- it is responsible for executing the transactions on the organised market — it is the registered participant at IBEX and the party accountable to the exchange operator for delivery of quantities and compliance with market rules.
- it is obliged to pay the RES producers for the purchased electricity regardless of whether it successfully realises that electricity on the exchange.

As of 01.07.2021, RES producers with a capacity greater than or equal to 0.5 MW are obliged to sell the electricity they produce to the Bulgarian National Energy Exchange (IBEX). The Company has two types

of contracts concluded with such RES producers. Usually, it sells on their behalf to IBEX the quantities according to the daily schedule for produced electricity specified by them. The company buys the same monthly quantity of produced electricity, at the average selling price reached on the exchange, from RES producers. The Company receives remuneration in the form of a commission, which is calculated based on the quantities of energy sold for the past period (on a monthly basis) on behalf of the relevant RES producers to IBEX. Also, as of 01.10.2019, the company has another type of contracts concluded with RES producers, to which it sells the electricity they produce to IBEX and buys the energy they produce at a fixed price. For these sales, the Company bears the price risk of the sale of electricity. The remaining obligations and conditions under the second type of contracts are identical to those under the first type of contracts.

The Company has determined that it does not typically control the goods before they are transferred to IBEX and is not able to direct the use or obtain benefit from the goods, especially in the first type of RES contract, because:

- it does not bear primary (primary) responsibility for the fulfillment of performance obligations;
- it cannot determine the amount of energy produced;
- it does not have any freedom of action when negotiating prices.

Due to the above, the company has determined that in the performance of these contracts, it acts in its capacity as an agent.

Revenue from sales under these contracts is recognized in the amount of the commission (net remuneration) that the company retains after paying the other party the remuneration received as a result of the quantities of energy sold to IBEX.

According to the Electricity Trading Rules and the Price Decisions of EWRC, through electricity sales the Company collects from its customers amounts owed to third parties in relation to:

- grid service fees determined at EWRC prices in favour of the distribution companies.
- the "Obligation to Society" component at a price determined by EWRC in favor of the Energy System Security Fund (ESSF); According to the current pricing decisions of EWRC in 2026, the price of the "Obligation to Society" component is EUR zero.
- fees for electricity supply disconnection and re-connection to customers under the Trader license in favour of distribution companies.

The company does not exercise control, cannot manage and determine the amount of the amounts specified above, and does not receive remuneration for these sales, as it pays the third parties in full the amounts collected by it from the customers. On this basis, the Company has determined that its obligation is rather to collect the amounts due from the customers on behalf of the third parties, which obligation is legally regulated.

Therefore, it has determined to present the income and expenses from these transactions net in the statement of profit or loss.

Electrohold Trade, according to the Rules on trade with electricity and EWRC's Price Decisions, by selling electricity, collects from its customers amounts due to third parties, in relation to:

- network service fees determined at EWRC prices in favour of the distribution companies – transmission and access fees.
- the "obligation to society" component at a price determined by EWRC in favour of Energy System Security Fund (ESSF). Under the decision of EWRC from 01.07.2025 the price for component "obligation to society" is EUR 0.00.

The company does not exercise control and cannot control or determine the amounts described hereinabove, nor does it receive consideration for these sales, since it pays to third parties the full amount of the payment collected from customers. Therefore, the Company has determined that its obligation is rather to collect the amounts due by customers on behalf of third parties, which is a statutory obligation. Therefore, it has elected to present revenue and expenses related to these transactions net in the statement of comprehensive income.

Revenue from construction services for the construction of energy facilities

Under construction service contracts, the company identifies various goods and services that must be provided to complete the project. However, the goods and services are not distinguishable in the context of the contract because the company's promise to transfer individual goods and services is not separately distinguishable from the other promises in the contract. The company provides a significant service of integration of individual goods and services in one object, for the execution of which the contract was concluded. The company reports one performance obligation under each individual contract.

The company is usually entitled to receive payment for work performed to date that will at least compensate it for the costs incurred, plus a reasonable profit in the event that the contract is terminated for reasons other than the company's default (a legally enforceable right to payment). The transfer of control and recognition of revenue from sales of construction services is performed over time by measuring the degree of fulfillment of the company's obligations (stage of completion). To measure progress (stage of completion) the company uses the output method, based on quantifiable calculations/protocols for the performance completed to date and/or completed key stage (the part of the physical performance of the work under the contract). This method was determined to be the most appropriate as the client controls the asset while it is being created/enhanced. The customer controls the work in progress, the completed work remains the property of the customer upon termination of the contract, the customer may change the design specifications during the contract term.

Guarantees

Contracts for construction services include a standard warranty clause that ensures that the construction works meet the agreed specifications and standard quality conditions within the statutory time limits from the date of completion and acceptance of the sites. This warranty is required by law. The management of the company has determined that this guarantee only provides assurance that the services performed correspond to those agreed in terms of scope and quality and therefore does not constitute a separate performance obligation. These guarantees are accounted for in accordance with IAS 37 Provisions, Contingent Liabilities and Contingent Assets.

Electrohold Bulgaria considers itself:

- to be the principal with regard to the goods sold. Revenue from the sale of goods is recognized at a point in time when the transfer of the control over the goods occurs.
- acts as an agent with regard to some of the services provided, such as some consultancy services, collection fees, outsourced services provided by commercial centers, GPS systems, part of the expenses for publications, advertisements, announcements, fulfilment of orders for purchase of good from and at the expense of the client, etc.

Transaction price and payment terms

Electrodistribution Grid West performs its licensing activity under general and individual administrative acts issued by The Energy and Water Regulatory Commission, which are obligatory for execution, including with respect to price formation. Prices are regulated by the state.

Upon determining the transaction price, the Group also takes into consideration variable consideration and the presence of a significant financing component (*if any*).

Electrohold Sales performs its licensing activity under general and individual administrative acts issued by The Energy and Water Regulatory Commission, which are obligatory for execution, including with respect to price formation.

The prices applicable for sales under the End Supplier and Last Resort Supplier licenses are determined in accordance with the EWRC-approved Methodology for Determining the Electricity Prices of the Supplier of Last Resort (promulgated in State Gazette No. 83 of 1 October 2024, effective from 1 October 2024).

With respect to sales under the Electricity Trade license, the transaction price is usually determined as a fixed (unit) selling price set in a contract, in accordance with a general or customer-specific price list and may include a variable consideration and a significant financing component effect (if any). Sales on the IBEX are carried out at exchange prices valid for the date and time of the transaction.

Electrohold Trade supplies electricity to corporate and business customers and trades on the wholesale market at free prices separately determined for each transaction.

Variable consideration

The variable consideration is included in the transaction price only to the extent that it is highly probable that a significant reversal in the amount of cumulative revenue recognised will not occur. The forms of variable consideration include contract penalties – *penalties for default of a party's obligation, including for quality performance by the Group companies.*

Variable consideration in the form of penalties is included as a deduction of the transaction price only if payment is very probable. The Group's experience shows that historically, it has observed the requirements of contracts with customers and has not charged penalty payables. The receipt of variable consideration in the form of penalties due by the customer depends on customers' actions.

Therefore, it is only included within the transaction price where the uncertainty of receipt has been resolved. Such is usually interest due for customers' late payment.

Significant financing component

Advance payment

In contracts with customer usually pays in advance. The Group has performed an analysis and has determined that the duration of the period from the customer's payment and the transfer of control over these services is usually less than twelve months, therefore, there is no significant financing component.

When the period exceeds 365 days, the Group has determined that a financing component exists, since the purpose of the advance payment is to ensure the performance of customers' obligations, including upon contract termination due to a reason other than default.

The advance payments received are carried as contract liabilities and are recognised as revenue following the construction of the asset, thereby the connection service is carried out.

Contract costs

The Group states as contract costs the following:

- the additional and directly related expenses it incurs upon concluding a contract with a customer, which it expects to recover over a period longer than twelve months *(**costs to obtain a contract with a customer**)* and
- the expenses it incurs to fulfil a contract with a customer and which are directly related to the specific contract, support the generation of resource to be used in the contract fulfilment and the Group expects to recover them over a period longer than twelve months (*costs to fulfil such contracts)*.

In its usual business activity, the Group does not incur any direct and specific costs to obtain contracts with customers and contracts to fulfil such contracts which would not have occurred if the respective contracts had not been concluded and which are subject to capitalisation.

Contract balances

Trade receivables and contract assets

Trade receivables constitute the Group's unconditional entitlement to consideration under contracts with customers and other counterparties (i.e. it is only dependent on the passage of time before payment of the consideration).

A contract asset is the Group's right to consideration in exchange for goods or services that it has transferred to a customer but is not unconditional (receivable accrual). If by transferring the products and/or providing the services the Group performs its obligation to the customer to pay the respective

consideration and/or before the payment is due, a contract asset is recognised for the consideration worked-out (which is conditional). Recognised contract assets are reclassified as trade receivables when the right to consideration becomes unconditional. A right to consideration is unconditional if only the passage of time is required before payment of that consideration is due.

The initial measurement, remeasurement and impairment of trade and other receivables and contract assets are disclosed in Notes 3.2 and 16.

Contract liabilities

A contract liability is the consideration received from the customer and/or the unconditional right to receive consideration before it has performed its contractual obligations. Contract liabilities are recognised as revenue when (or as) the performance obligations are satisfied.

Contract assets and contract liabilities are stated separately from trade receivables and payables in the consolidated statement of financial position. They are included within the group of current assets when their maturity is within 12 months or within the Group's usual operating cycle, and the others are stated as non-current.

Assets and liabilities from a single contract are stated net in the consolidated statement of financial position, even if they result from difference performance obligations in the contract.

Following their initial recognition, trade receivables and contract assets are subject to review for impairment pursuant to the conditions of IFRS 9 *Financial Instruments*.

Impairment losses from contracts with customers are stated separately from other impairment losses.

Amounts charged, applying an approved methodology, for the electricity transmission and access service, which was not actually measured and reported to customers at the end of the reporting period are treated and presented as contract assets. Amounts received from customers for connection services to the electricity distribution network, for which the contracts have not been concluded, and the assets are in the process of construction, are treated and presented as liabilities under contracts with customers.

Other revenue from customers

The Group treats as other revenue rental income from the operating lease of property, plant and equipment, and revenue from amounts billed upon established incomplete or inaccurate measurement pursuant to Art. 56 (1) of the Electricity Metering Rules in Bulgaria.

The Group usually presents income from expired payables written-off, revenue from default penalties, different from delayed payment penalties under contracts with customers and others. Revenue from delayed payments penalties is recognised as revenue to the amount for which a high probability exists for the Company to obtain economic rewards.

2.5.9. Finance income and costs

Finance income

Finance income is included in the consolidated statement of comprehensive income (within profit or loss for the year) when earned and comprises: interest revenue from current accounts and term deposits.

Interest income is calculated by applying the effective interest rate on the gross carrying amount of financial assets, with the exception of financial assets, which are credit-impaired (Stage 3), for which interest income is calculated by applying the effective interest rate on their amortised cost (i.e. the gross carrying amount adjusted for impairment allowance).

Finance costs

Finance costs are included in the consolidated statement of comprehensive income (within profit or loss for the year) when incurred and comprise interest costs on loans obtained, interest costs on leases, and bank charges on loans and guarantees.

2.5.10. Government grants

Government grants are recognised where there is reasonable assurance that the grant will be received, and all attached conditions will be complied with. When the grant relates to an expense item, it is recognised as income over the period necessary to match the grant on a systematic basis to the costs that it is intended to compensate. Where the grant relates to an asset, it is set up as deferred revenue and released to income in equal amounts over the expected useful life of the related asset. Where the Group receives non-monetary grants, the asset and the grant are recorded at nominal amounts, and the income is released to the consolidated statement of comprehensive income over the expected useful life and pattern of consumption of the benefit of the underlying asset by equal annual instalments.

2.5.11. Technological costs from distribution of electricity

Technological costs occur as a result of the transfer of electricity to end-consumer trough distribution grid. Based on the methodology adopted, the EWRC approves a maximum annual level of technological losses as a percentage and monthly deviations rates. Both, a percentage and monthly deviations rates, are disclosed in Note 4.

2.5.12. Income Taxes

Current corporate income tax

Current income tax assets and liabilities for the current and prior periods are recognised at the amount expected to be recovered from or paid to the taxation authorities. The tax rates and tax laws used to compute the amount are those that are enacted or substantively enacted by the reporting date.

Current taxes are debited or credited directly in equity (and not in the consolidated statement of comprehensive income) when the tax relates to items recognised directly in the current or prior periods equity.

Deferred income tax

Deferred taxes are recognised using the balance sheet method for all temporary differences of each consolidated entity as at the reporting date arising between the tax bases of assets and liabilities and their carrying amounts, including if any have arisen as a result of consolidation adjustments.

Deferred tax liabilities are recognised for all taxable temporary differences, except to the extent to which the deferred tax liability arises from the initial recognition of an asset or liability from a transaction that is not a business combination and, at the time of the transaction, affects neither the accounting profit nor taxable profit or loss.

Deferred tax assets are recognised for all deductible temporary differences and the carry-forward of unused tax credits and unused tax losses, but to the extent that it is probable they will reverse and a taxable profit will be available or taxable temporary differences might occur, against which these deductible temporary differences, carried forward unused tax credits and unused tax losses can be utilized, with the exception of the differences arising from the recognition of an asset or liability, which has affected neither the accounting nor taxable profit /(loss) at the transaction date.

The carrying amount of deferred tax assets is reviewed by the Group entities at each reporting date and is reduced to the extent that it is no longer probable that sufficient taxable profit will be realised to allow all or part of the deferred tax asset to be utilised. Unrecognised deferred income tax assets are reassessed at each reporting date and are recognised to the extent that it has become probable that future taxable profit will be realized to allow the deferred tax asset to be recovered.

Deferred income tax assets and liabilities are measured at the tax rates that are expected to apply to the year when the asset is realised or the liability is settled, based on tax rates and tax laws that have been enacted or substantively enacted at the reporting date.

Deferred tax relating to items recognised directly in equity in the current or prior periods is debited or credited directly to equity (and not in the consolidated statement of comprehensive income).

Deferred tax assets and deferred tax liabilities are offset only if a legally enforceable right exists to set off current tax assets against current income tax liabilities and the deferred tax assets and liabilities relate to income tax imposed by one and the same taxation authority for one and the same taxable entity.

The applicable income tax rate in subsidiaries' country of operation - Republic of Bulgaria, for 2026 and 2025 is 10%.

Global tax

Due to the size of the economic activity of the Starcom Holding AD group, to which the Group belongs, it is subject to additional corporate tax in accordance with the changes in the Corporate Income Tax Act, which are effective from January 1, 2024. During the period, the Group to which the Electrohold Group made an estimate of the applicable tax legislation to determine the potential exposure to tax liabilities under Pillar Two. The entity performed this assessment based on current information available regarding the Group entities' operations, as well as applicable effective tax rates in each affected jurisdiction and prior year and expected effective tax rates, adjusted for Pillar Two disallowed deductions, for each affected jurisdiction. Based on this assessment, there are no top-up tax necessary at the Parent Company. Based on this assessment, an accrual equal to 3% of the subsidiaries' profit before tax has been recognized in respect of global income tax expenses for 2025 (and 2024). In the first half of 2026, all subsidiaries filed their declarations for national top-up tax for 2024 within the statutory deadlines, and the final calculations resulted in an additional tax expense of EUR 82 thousand.

2.5.13. Value added tax ("VAT")

Revenue, expenses and assets are recognised net of value added tax (VAT) except where:

- VAT incurred on a purchase of assets or services is not recoverable from the taxation authority, in which case the VAT is recognised as part of the cost of acquisition of the asset or as part of the expense item as applicable; and
- receivables and payables that are stated with the amount of VAT included.

The net amount of VAT recoverable from, or payable to the taxation authority is included as part of receivables or payables in the consolidated statement of financial position.

2.5.14. Significant accounting judgements, estimates and assumptions

The preparation of the financial statements requires management to make judgments, estimates and assumptions that affect the reported amounts of revenues, expenses, assets and liabilities, and the disclosure of contingent liabilities, at the reporting date. Uncertainties related to the made assumptions and estimates could result in factual outcomes that could require material adjustments to the carrying amount of respective assets or liabilities in future reporting periods.

Estimates and assumptions

The key assumptions concerning the future and other key sources of estimation uncertainty at the reporting date, that have a significant risk of causing a material adjustment to the carrying amounts of assets and liabilities within the next reporting period are described below.

It is the judgement of the Group's management that there are presently no clear and specific factors that impact the main assumptions related to future and other main sources of uncertainty in the estimates at the reporting risk for which a significant risk exists of adjustments to the carrying amounts of assets and liabilities in the next reporting period.

2.5.14.1. Revenue from contracts with customers

Upon the recognition of revenue and the preparation of the consolidated financial statements of the Group, the management makes various judgements, estimates and assumptions that impact the revenue, expenses, contract assets and liabilities accounted for and the respective disclosures. As a result of the inherent uncertainty of these assumptions and estimates, significant adjustments may arise to the carrying amount of the respective assets and liabilities in the future, accordingly to the expenses and revenue accounted for.

The key judgements and assumptions that have a significant impact on the amount and period of recognition of revenue from contracts with customers are disclosed in detail in the Accounting Policy, Note2.5.8, and are as follows:

- Determining the point in time of satisfying performance obligations for the service of connection to the electricity distribution grid – the Parent Company has performed an analysis and has determined that control is transferred to the customer at a point in time, when the connection assets are constructed and commissioned and the connection service has been rendered;
- Estimate of variable consideration - penalties for default of contractual obligations;
- Judgement on significant financing component – when the period between the customer's payment for the services promised and the point of transfer of control over these services exceeds 365 days;
- Principal vs. agent considerations;
- Determining the point of satisfaction of performance obligations in the case of electricity sales and contracts for the construction of energy installations.

2.5.14.2. Calculation of expected credit losses from financial assets measured at amortised cost

The measurement of expected credit losses for financial assets stated at amortised cost (trade and other receivables and contract assets) granted is an area that requires the use of complex models and material assumptions for future economic conditions and the credit behaviour of customers and debtors (for instance, the probability of counterparties not meeting their obligations and the pursuant losses).

In order to apply these requirements, the Group's management makes a number of material judgements, such as: a) determining criteria to identify and measure significant credit risk increases; b) selection of suitable models and assumptions to measure expected credit losses; c) establishing groups of similar financial assets (portfolios) for the purpose of measuring expected credit losses; d) establishing and assessing the correlation between historical default rates and the behaviour of certain macro indicators to reflect the effects of forecasts for these macro indicators in the calculation of expected credit losses (Note 16).

Trade and other receivables

The Group uses a provisioning matrix to calculate expected credit losses from trade and other receivables and contract assets. The provision rates are based on days past due for groups from different customer segments (portfolios) sharing similar loss models (type of client by sector).

Each provisioning matrix is initially based on detailed historical observation of default rates in the Group's receivables and the movement of receivables by delay groups. Usually, historical data is used for two years as per the consolidated financial statement's date. Additionally, the Group calibrates the matrix so as to adjust historically ascertained dependence for credit losses with forecast information by also using probability scenarios. For instance, if forecast economic conditions are expected to aggravate or improve in the next year, which might result in proven correlational increase in delays for a certain sector (type of customer), the historic default rates are adjusted. At each reporting date, the observable historical default rates are updated and the effects of changes in the estimates are accounted for.

Regarding trade receivables from related parties and contract assets under contracts with customers – related parties, the Group's management has performed special analyses and has tracked collectability and has determined that they contain a negligible percentage of expected losses due to the established control mechanisms for monitoring and settling intragroup accounts at company level. Therefore, it has applied a "100% percent collection" rating for receivables from other entities within The Group.

The assessment of the relation between observable historical default rates, the forecast economic conditions and expected credit losses is a significant accounting judgement. The amount of expected credit losses is sensitive to changes in circumstances and forecast conditions. The Group's historical credit closes and the forecast economic conditions may deviate from actual collection rates in the future.

The information about expected credit losses from trade and other receivables and contract assets is disclosed in Notes 16,3.2.

Cash and cash equivalents

In order to calculate expected credit losses for cash and cash equivalents at banks, the Group applies a „three-stage" impairment model established by IFRS 9. For this purpose, it applies a rating model by using the banks' ratings as determined by internationally recognised rating firms such as Moody's, Fitch, S&P, BCRA and Bloomberg. Based on this, on the one hand, public data is used for the PD (probability of default) of the respective bank, and on the other hand, based on the change in a bank's rating, the Group determines the presence of increased credit risk. Loss given default is measured based on the formula.

Accrued credit loss for impairment of cash and cash equivalents is presented in Note 19.

2.5.14.3. Provision for court claims and provision for penalties

The Group is involved in a certain of litigations and proceedings giving rise to provisions and contingent liabilities which are presented in Note 30.

Significant judgement is necessary to be applied by the management, with support from internal legal experts and external lawyers, in the estimation their potential effects (i.e. whether the liability should be recognized, or a contingency should be disclosed and whether the potential outflows can be reliably estimated) due to the inherent uncertainties over the final outcome of these litigations and proceedings and their complexity.

In addition, these provisions originate in relation to current liabilities, object to court disputes with big dynamics and fluctuation in the payment and completion deadline thereof. Therefore, the management has decided to include them fully within current liabilities.

2.5.14.4. Retirement benefits

The cost of defined benefit pension plans is determined using actuarial valuations and the use of external actuarial experts. The actuarial valuation involves making assumptions about discount rates, future salary increases, staff turnover and mortality rates. Due to the long-term nature of these plans, such estimates are subject to significant uncertainty.

2.5.14.5. Useful life of property, plant and equipment, and intangible assets

Financial reporting of property, plant, equipment and intangible assets involves the use of estimates for their expected useful life and remaining values, which are based on judgments from the Group's management.

2.5.14.6. Lands and buildings without title deeds

A subsidiary (Electrodistribution Grid West EAD) owns land and buildings for which there are no title deeds. These lands and buildings are included in the statement of financial position of the subsidiary based on the judgment of the subsidiary's management and lawyers that it is not likely that these assets will not be owned by the Company due to the fact that they have a specific use and there is no possibility for another company to exercise the same activity such as that of Electrodistribution Grid West EAD on the territory of the country for which the subsidiary has been issued a license, and accordingly to claim ownership of these assets. The fact that the three distribution companies, of which the subsidiary is the legal successor, acquire those assets of its grantor "NEK" EAD, through which the activity of "distribution of electric energy" is carried out, namely the energy facilities/electrical systems and power lines is also important with high, medium and low voltage for the distribution and delivery of electrical energy.

2.5.14.7. Impairment of inventories

At the end of each financial year, the Group reviews the state, useful life and usability of the existing inventories. When the companies identify inventories the assessment of which shows that it is highly probable for them to be not realised at their current carrying amount in the following reporting periods, these inventories are impaired to net realisable value.

2.5.14.8. Impairment of Property, Plant and Equipment, Intangible Assets and Goodwill

At the end of each reporting date, the Group assesses whether there is any indication that an asset may be impaired. Where an indicator of impairment exists, the Group reviews the recoverable amounts of its property, plant and equipment to determine whether such amounts continue to exceed the assets' carrying values. The assessment of the recoverable amount involves inherent uncertainty in forecasting and discounting future cash flows. The impairment identified is recognised directly in the consolidated statement of comprehensive income as expense for PPE impairment, within profit or loss.

The Group has not incurred an impairment loss on goodwill in 2026 or 2025.

2.5.14.9. Business combinations

On initial recognition, the assets and liabilities of the acquired business are included in the consolidated statement of financial position at their fair values. In measuring fair value management uses estimates about future cash flows and discount rates, however, the actual results may vary. Any measurement changes upon initial recognition would affect the measurement of goodwill.

Management uses various valuation techniques when determining the fair values of certain assets and liabilities acquired in a business combination. In particular, the fair value of contingent consideration is dependent on the outcome of many variables including the acquirees' future profitability.

2.5.14.10. Assessment of lease contract components

Determining whether a contract contains a lease or lease components and determining the lease term of leases with renewal and termination options – as lessee

Upon identification and classification of a lease or a lease component of a contract, the Group determines whether the contract contains an identifiable asset and whether it transfers the right of control over this asset for the contract term. Contracts for rental of property and equipment contain a lease, since the Group controls the use of assets over the contract term for which it pays a consideration. The assets are identifiable.

The Group determines the lease term as the non-cancellable period of the lease, together with both: a) periods covered by an option to extend the lease if the lessee is reasonably certain to exercise that option; and b) periods covered by an option to terminate the lease if the lessee is reasonably certain not to exercise that option.

The Group's effective leases contain an extension option and a termination option. The Group applies judgement to determine whether it is reasonably certain that it would exercise the extension/termination option, considering all relevant facts and circumstances that create an economic incentive for the lessee to exercise the option to extend the lease, or not to exercise the option to terminate the lease (such as costs for negotiation, relocation and identification of another asset, the importance of the underlying asset for the Group's operations, etc.).

After the commencement date, the Group reassesses the lease term upon the occurrence of a significant event or a significant change in circumstances that is within its control and affects whether the Group is reasonably certain to exercise an option not previously included in its determination of the lease term, or not to exercise an option previously included in its determination of the lease term.

Determining the incremental interest rate of leases in which the Group is a lessee

In the cases when the companies of the Group is a lessee and cannot readily determine the interest rate to discount lease liabilities, it uses the incremental borrowing rate it would have to pay to borrow over a similar term, and with a similar security, the funds necessary to obtain an asset of a similar value to the right-of- use asset in a similar economic environment. In case of leases where no similar borrowing exists, the Group companies seek observable data such as market levels of loans and publicly available bank statistics, and performs specific calculations and adjustments to reflect their own credit rating.

Review of indicators for impairment of right-of-use assets

As at the date of the financial statements, the Group's management performs an impairment review of right-of-use assets. If indicators exist that the approximate recoverable amount is lower than their carrying amount, the latter is impaired to the recoverable amount of assets. The group companies have reviewed and concluded there are no indicators for impairment as at 30.09.2026.

Interpretation of the scope and content of a penalty when determining lease terms

The Group accounts for several leases (cancellable) which do not have a specific lease term, and the term continues until any of the parties – lessee or lessor, terminates them. Some of the leases contain a termination notice period – for instance, not more than 6 months; respectively, the contract may not require any of the parties to pay amounts upon termination, as well as contracts with an option for multiple re-negotiation – which include an initial period and an unlimited number of re-negotiations after the initial period, unless terminated by either of the parties. With respect to these two types of contracts, the Group applies a wider interpretation of "penalty" according to IFRS 16, outside the scope of the ones described in the lease, based on reasonably substantiated economic incentive or factors of deterring nature or acting as a sanction (for instance: significant costs to find an alternative underlying asset, significant relocation costs, significance of the underlying asset for the Group's operation, etc.). For these two types of contracts, the Group's aim is that the lease term corresponds to its realistic judgement on the period of use of the underlying asset.

The terms of these leases are as follows:

- Real estate – 6 - 9 years
- Energy facilities – 5 years

Fair value measurement

Management uses techniques to estimate the fair value of financial instruments (in the absence of quoted prices in an active market). In applying valuation techniques, management uses to the maximum extent market data and assumptions that market participants would adopt in valuing an instrument. When there is no applicable market data, management uses its best estimate of assumptions that market participants would make. These estimates may differ from the actual prices that would have been determined in a fair market transaction between informed and willing parties at the end of the reporting period.

2.5.15. Property, plant and equipment

Property, plant and equipment are initially stated at cost less the accumulated depreciation and accumulated impairment losses, if any. All costs also include the cost of replacing parts of the property, plant and equipment when these costs are incurred and provided that they meet the criteria for recognition of a non-current tangible asset. All costs also include borrowing costs for long-term construction projects if the recognition criteria are met.

In the case of expenses for fundamental examination and repair/enhancement of plant and/or equipment, they are included in the carrying amount of the asset as replacement costs provided that they meet the criteria for recognition of a non-current tangible asset and in as far as their result in replacement of an essential part of the existing asset or in its improvement, thereby increasing its functionalities and/or production capacity. All other repairs and maintenance costs are recognized in profit or loss in the period in which they are incurred.

Construction in progress is measured at cost. Once an asset is placed in service, all costs associated with it that are stored in the construction work in progress account are shifted into whichever fixed asset account is most appropriate for the asset and depreciation starts.

Depreciation is calculated on the straight-line method over the useful life of assets. For 2026 and 2025 the useful lives of the Group's property, plant and equipment are estimated as follows:

	Years
Buildings	25 - 50
Computer systems	2 - 5
Measuring equipment and tools	2 - 8
Industrial machines and equipment	2 - 25
Equipment in transformer units and sub-stations	2 - 20
Power distribution lines and cables -medium and low voltage	20 - 25
Equipment, installations, sewerage, roads, fences	5 -25
Fixture and fittings	2 - 8
Vehicles, motor and electric trucks	2 - 5

Depreciation expense on property, plant and equipment is recognized in the line "Depreciation and amortisation" in the Statement of Profit or Loss and Other Comprehensive Income. Tangible fixed assets are derecognised from the consolidated statement of financial position when they are permanently disposed of, and no future economic benefits are expected therefrom or on sale.

The gains or losses arising from the sale of an item of 'property, plant and equipment' group are determined as the difference between the consideration the Group expects to be entitled to (sales revenue) and the carrying amount of the asset at the date when the customer obtains control thereon.

The gains or losses arising from the sale of an item of 'property, plant and equipment' group are determined as the difference between the consideration the Company expects to be entitled to (sales revenue) and the carrying amount of the asset at the date when control is transferred. They are stated on a net basis within 'Other income/(expenses), net' line of the Consolidated Statement of Profit or Loss and Other Comprehensive income (Note 6).

At the end of each financial year, a review is performed of the residual amounts, useful life and the methods applied for asset depreciation, and if expectations differ from prior estimates, the latter are prospectively adjusted.

2.5.16. Intangible assets

Intangible assets are initially stated at cost less the accumulated amortization and accumulated impairment losses, if any.

The Group has no intangible assets with indefinite useful life.

Intangible assets with finite lives are amortised over the useful economic life and assessed for impairment whenever there is an indication that the intangible asset may be impaired.

For 2026 and 2025 the useful lives of the intangible assets are estimated as follows:

	Years
Rights of use	10 - 20
Software	3 - 12
Others	18 - 25

Intangible assets are derecognised from the statement of financial position when they are permanently disposed of and no future economic benefits are expected therefrom or on sale, at the date of transfer of control to the asset recipient.

The gains or losses arising from the sale of an item of intangible assets are determined as the difference the consideration the Group expects to be entitled to (sales revenue) and the carrying amount of the asset at the date when the customer obtains control thereon. They are stated net within 'Other operating income/(losses)' on the face of the statement of comprehensive income (within profit or loss for the year).

At the end of each reporting year, a review is performed of the useful life and amortisation methods applied with respect to intangible assets with finite lives. The changes in the expected useful life or in the model of consumption of future economic rewards from the intangible asset are accounted for by means of change in the amortisation term or are treated as changes to the accounting estimates.

2.5.17. Impairment of non-financial assets

The Group assesses at each reporting date whether there is an indication that an asset may be impaired. If any such indication exists, or when annual impairment testing for an asset is required, the Group makes an estimate of the asset's recoverable amount. An asset's recoverable amount is the higher of an asset's or cash-generating unit's fair value less costs to sell and its value in use. The asset's recoverable amount is determined for an individual asset, unless the asset does not generate cash inflows that are largely independent of those from other assets or groups of assets. Where the carrying amount of an asset exceeds its recoverable amount, the asset is considered impaired and is written down to its recoverable amount.

In assessing value in use, the estimated future cash flows are discounted to their present value using a pre-tax discount rate that reflects current market assessments of the time value of money and the risks specific to the asset. In determining fair value less costs to sell, recent market transactions are taken

into account, if available. If no such transactions can be identified, an appropriate valuation model is used. These calculations are corroborated by valuation multiples or available sources of information about the fair of an assets or cash-generating unit.

The Group bases its impairment calculation on detailed budgets and forecast calculations which are prepared separately for each of the Group's cash-generating units to which the individual assets are allocated. These budgets and forecast calculations are generally covering a period of five years. For longer periods, a long-term growth rate is calculated and applied to project future cash flows after the fifth year.

Impairment losses are recognised within 'Other expenses' in the consolidated statement of comprehensive income (within profit or loss for the year).

The Group makes an assessment at each reporting date as to whether there is any indication that previously recognised impairment losses may no longer exist or may have decreased. If such indication exists, the Group makes an estimate of recoverable amount. A previously recognised impairment loss is reversed only if there has been a change in the estimates used to determine the asset's recoverable amount since the last impairment loss was recognised. If that is the case the carrying amount of the asset is increased to its recoverable amount.

That increased amount cannot exceed the carrying amount that would have been determined (net of depreciation) had no impairment loss been recognised for the asset in prior years. Such reversal is recognised in the statement of comprehensive income, within the same item in which the impairment itself has been recognized.

Goodwill is allocated to those cash-generating units that are expected to benefit from synergies of the related business combination and represent the lowest level within the Group at which management monitors goodwill.

Cash-generating units to which goodwill has been allocated are tested for impairment at least annually. The test is performed in line with the valuation of the subsidiary to which the goodwill has been assigned at acquisition (ELH Trade EAD). The valuation is based on discounted cash flow model which incorporates key parameters for five projected years as:

- Quantity of traded electricity – based on historical data for the past 3 years and management guidance.
- Gross margin of sales – based on historical data for the past 3 years and management guidance.
- Inflated operating expenses for the projected period.
- Discount rate calculated under capital asset pricing model (CAPM) – inputs used from data Aswath Damodaran.

Impairment losses for cash-generating units reduce first the carrying amount of any goodwill allocated to that cash-generating unit. Any remaining impairment loss is charged pro rata to the other assets in the cash-generating unit.

2.5.18. Financial instruments

A financial instrument is any contract that simultaneously gives rise to a financial asset at one entity and a financial liability or equity instrument at another entity.

2.5.18.1. Financial assets

Initial recognition, classification and measurement

Upon initial recognition, financial assets are classified in three groups, based on their subsequent measurement: at amortised cost; at fair value through other comprehensive income, and at fair value through profit or loss.

The Group initially measures financial assets at fair value, and in the case of financial assets which are not stated at fair value through profit and loss, the direct transaction costs are added. An exception to this rule is trade receivables that do not contain a significant financing component – they are measured based on the transaction price determined under IFRS 15 Revenue from Contracts with Customers (Note 3).

The purchases and sales of financial assets whose conditions require asset delivery within a certain period, usually pursuant to legislation or the effective practice of the respective market (regular way purchases), are recognised using trade date accounting, i.e. on the date when the Group committed to purchase or sell the asset.

The classification of financial assets upon their initial recognition depends on the characteristics of the contractual cash flows of the respective financial asset and on the Group's business model for management thereof. In order for a financial asset to be classified and measured at amortised value or at fair value through other comprehensive income, its conditions should give rise to cash flows that are "solely payments of principal and interest (SPPI)" on the principal amount outstanding. For this purpose, analysis is performed by means of SPPI test at instrument level.

The Group's business model for the management of financial assets reflects the way the Group manages its financial assets to generate cash flows. The business model determines if cash flows are generated only by the collection of contractual cash flows, the sale of financial assets, or both.

Subsequent measurement
For the purpose of subsequent measurement, the Group's financial assets are classified as financial assets at amortised cost (debt instruments).

Financial assets at amortised cost (debt instruments)

The Group measures a financial asset at amortised cost if both of the following conditions are met:

- the financial asset is held within a business model whose objective is to hold financial assets in order to collect contractual cash flows and
- the contractual terms of the financial asset give rise on specified dates to cash flows that are solely payments of principal and interest on the principal amount outstanding.

Financial assets at amortised cost are subsequently measured using the effective interest method. They are subject to impairment. Gains and losses are recognised in the consolidated statement of comprehensive income (within profit or loss for the year) upon asset disposal, modification or impairment.

The Group's financial assets at amortised cost include cash and cash equivalents at banks, trade and other receivables, and contract assets (Notes 16, 19 and 3.2).

Financial assets at fair value through profit or loss (debt instruments)

Financial assets for which a "held to collect contractual cash flows" business model or a "held to collect and sell" business model do not apply, as well as financial assets whose contractual cash flows are not solely payments of principal and interest shall be reported at fair value through profit or loss.

Changes in the fair value of assets in this category are reflected in profit and loss. The fair value of financial assets in this category is determined by quoted prices in an active market or by using valuation techniques in the absence of an active market.

Derecognition

A financial asset (or, when applicable, a portion of a financial asset or a group of similar financial assets) is derecognised from the Group's consolidated statement of financial position, when:

- the rights to cash flows from the asset have expired, or
- the rights to cash flows from the asset have been transferred or the Group has assumed an obligation to pay in full the cash flows received, without undue delay, to a third party under a transfer agreement, in which: a) the Group has transferred substantially all risks and rewards from ownership of the asset; or b) the Group has neither transferred nor retained substantially all risks and rewards from ownership of the asset, but has transferred control thereon.

When the Group has transferred its right to obtain cash flows from the asset or has concluded a transfer agreement, it assesses the extent to which it has retained the risks and rewards of ownership. When the Group has neither transferred, not retained substantially all risks and rewards from ownership of the

financial assets, it continues to recognise the asset transferred to the extent of its continuing interest therein. In this case, the Group also recognises the respective liability. The transferred asset and the related liability are measured on a basis reflecting the rights and obligations that the Group has retained.

Continuing involvement in the form of a guarantee on the transferred asset is measured at the lower of the two values: the initial carrying amount of the asset and the maximum amount of consideration that the Group may be required to pay.

Impairment of financial assets

The Group recognises an allowance (impairment provision) for expected credit losses for all debt instruments which are not carried at fair value through profit or loss. Expected credit losses are calculated as the difference between the contractual cash flows due under the contractual conditions, and all cash flows the Group expects to receive, discounted at the initial effective interest rate. Expected cash flows also include cash flows from the sale of collateral held or other credit enhancements that constitute an integral part of the contractual conditions.

Trade and other receivables and contract assets

In order to calculate expected credit losses for trade and other receivables and contract assets, the Group has elected and applies a simplified approach based on an expected credit losses calculation matrix(es) and does not monitor subsequent changes in their credit risk. In this approach, it recognises an allowance (impairment provision) based on lifetime expected credit losses at each reporting date. The Group has developed and applies a provisioning matrix/es (Note 16). The information about the Group's expected credit losses from trade and other receivables and contract assets is disclosed in Note 10 and 16**.**

Default

An event of default is considered to have occurred when a client has not fulfilled its cash flow obligations on a given financial asset within the agreed term.

Cash

In order to calculate expected credit losses for cash and cash equivalents in banks, the Group applies the general impairment approach under IFRS 9. According to this approach, the Group applies a "three-stage" impairment model based on changes compared to the initial recognition of the credit quality of the financial instrument (asset).

The Group adjusts expected credit losses determined based on historical data with forecast macroeconomic indicators for which it has been established that a correlation exists and which may impact the future amount of expected credit losses (Note 2.5.14 and Note 19).

2.5.18.2. Financial liabilities

Initial recognition, classification and measurement

The Group's financial liabilities include trade and other payables, loans and borrowings.

All financial liabilities are initially recognised at fair value, and in the case of loans and borrowings and trade and other payables, net of direct transaction costs.

Subsequent measurement

The subsequent measurement of financial liabilities depends on their classification.

Classification groups

Loans and borrowing

Following their initial recognition, the Group measures interest-bearing loans and borrowings at amortised cost, applying the effective interest method. Gains and losses are recognised in the consolidated statement of comprehensive income (within profit or loss for the year) when the respective financial liability is derecognised, as well as through amortisation based on the effective interest rate.

The amortised cost is calculated by taking into consideration any discounts or premiums at acquisition, as well as fees or costs that constitute an integral part of the effective interest rate. Amortisation is stated as a “finance cost” in the consolidated statement of comprehensive income (within profit or loss for the year).

Derecognitions

Financial liabilities are derecognised when the obligation specified in the contract is discharged or cancelled or expires. An exchange between an existing borrower and lender of debt instruments with substantially different terms is accounted for as an extinguishment of the original financial liability and the recognition of a new financial liability. The difference between the respective carrying amounts is recognised in the statement of comprehensive income (within profit or loss for the year).

Offsetting of financial instruments

Financial assets and liabilities are offset, and the net amount reported in the consolidated statement of financial position, if a legally enforceable right exists to offset the recognised amounts and if there is an intention to settle on a net basis or realise the asset and settle the liability simultaneously.

This requirement results from the concept of the actual economic nature of the Group’s relations with a given counterpart stating that in the simultaneous presence of these two requirements the expected actual future cash flow and rewards for the Group is the net flow, i.e. the net amount reflects the Group’s actual right and obligation resulting from these financial instruments – in all cases to only receive or pay the net amount. If the two conditions are not simultaneously met, it is assumed that the Group’s rights and obligations with respect to these offsetting financial instruments are not exhausted in all situations by only the payment or receipt of the net amount.

The offsetting policy is also related to the measurement, presentation and management of actual credit risk and the liquidity risk pursuant from these offsetting instruments.

The criteria applied to establish the “current and legally enforceable entitlement to offsetting” are:

- lack of dependence on a future event, i.e. it should not only be applicable upon the occurrence of a future event;
- the offsetting should be enforceable and legally defendable during (cumulatively):
    - the Group’s usual business operations;
    - in case of default/delay, and
    - in case of insolvency.

The applicability of criteria is measured against the requirements of the Bulgarian legislation and the contractual relations between the parties. The condition of “presence of current and legally enforceable right to offsetting” is always and mandatorily assessed together with the second condition – for “mandatory settling of these instruments on a net basis”.

2.5.19. Derivative financial instruments and hedge accounting

Initial recognition and subsequent measurement

The Group uses derivative financial instruments – interest swaps, to hedge risks related to change in interest rates. These derivative financial instruments are initially recognised at fair value on the date of concluding the derivative contract. Following their initial recognition, derivatives continue to be measured at fair value. They are carried as financial assets when the fair value is positive, and as financial liabilities when the fair value is negative.

The fair value is determined based on observable market data (Level 2) for the respective type of trade derivative instruments – the source of information is the counterparty bank that uses its own information sources for market price levels and appropriate valuation methods and techniques to determine and offer to the Group reasonable amounts of fair value.

The Group has decided to recognize the contracts for derivative financial instruments (swaps) as an “economic hedge”.

Derivative instruments are classified and presented according to their residual maturity (up to / over 12 months) within current or non-current financial assets and liabilities.

Gains or losses from revaluation of derivatives (non-classified for reporting by the special procedure of IFRS 9 for (cash flow) hedge accounting) is currently recognised in the consolidated statement of comprehensive income (within profit or loss for the year) as “finance income”, respectively “finance costs”.

2.5.20. Fair value measurement

Some of the Group’s assets and liabilities are measured and presented and/or only disclosed at fair value for the purpose of financial reporting. Such are: on recurrent (annual) basis – *financial assets at fair value through profit or loss (derivatives), loans granted and received to/from third parties and loans received, certain trade and other receivables and payables, finance lease receivables and payables, etc.*

Fair value is the price that would be received to sell an asset or paid to transfer a liability in an orderly transaction between independent market participants at the measurement date. Fair value is an exit price and is based on the assumption that the sale transaction will take place either in the principal market for this asset or liability or in the absence of a principal market – in the most advantageous market for the asset or liability. Both the designated as a principal market and the most advantageous market are markets to which the Group must have an access.

Fair value is measured from the perspective of using the assumptions and judgments that potential market participants would use when pricing the respective asset or liability assuming that market participants act in their economic best interest.

In measuring the fair value of non-financial assets, the starting point is always the assumption what would be the highest and best use of the particular asset for the market participants.

The Group applies various valuation techniques that would be relevant to the specific features of the respective conditions and for which it has sufficient available inputs while trying to use at a maximum the publicly observable information, and respectively, to minimize the use of unobservable information. It uses the three acceptable approaches – the market approach, the income approach and the cost approach – whereas the most frequently applied valuation techniques include directly quoted and/or adjusted quoted market prices, market comparable (analogues) and discounted cash flows, including based on capitalised rental income.

All assets and liabilities that are measured and/or disclosed in the consolidated financial statements at fair value are categorised within the following fair value hierarchy, namely:

- Level 1 — Quoted (unadjusted) market prices in active markets for identical assets or liabilities;
- Level 2 — Valuation techniques that use inputs other than directly quoted prices but are observable, either directly or indirectly, including where the quoted prices are subject to significant adjustments; and
- Level 3 — Valuation techniques for which the lowest level input that is significant to the fair value measurement is unobservable.

For assets and liabilities that are measured at fair value in the consolidated financial statements on a recurring basis, the Group determines at the end of each reporting period whether transfers between levels in the fair value hierarchy are deemed to be made for a particular asset or liability depending on the inputs available and used at that date.

The Group has developed internal rules and procedures for measuring the fair value of various types of assets and liabilities.

2.5.21. Cash and cash equivalents

Cash and cash equivalents comprise cash at banks, in EUR and foreign currency respectively as well as short-term deposits with an original maturity of three months or less.

For the purpose of the cash flow statement, cash and cash equivalents consist of cash and cash equivalents as defined above.

Cash and cash equivalents are subsequently measured at amortised cost, less the impairment accrued for expected credit losses.

2.5.22. Inventories

Inventories are valued at the lower of cost and net realisable value.

The purchase costs of inventories comprise the purchase price, import duties and other taxes (other than those subsequently recoverable by the entity from the taxing authorities), and transport, handling and other costs directly attributable to the acquisition of spare parts. Trade discounts, rebates and other similar items are deducted in determining the costs of purchase.

The costs incurred in using inventories are measured as follows:

Spare parts	–	purchase cost on a weighted average basis;
Materials	–	purchase cost on a weighted average basis.

The net realisable value is the estimated selling price in the ordinary course of business less the estimated costs necessary to make the sale.

The policy for presentation and accounting for inventory stocks intended for the construction of non-current assets reflects the specific nature of activity – namely, simultaneous and active construction of specialized assets, energy facilities and equipment, as well as ongoing maintenance of the electricity distribution grid in constant operability. Therefore, the Group has decided to present all inventory stocks as current assets within “inventories”, since at the stage of supply and storage thereof they could be equally used for both repair activities to support grid operability and quick reaction in any situations, and for capital works and asset construction; respectively, this portion of materials is capitalized within specific equipment and facilities. Therefore, the Group has determined the point of transfer of materials to non-current assets within property, plant and equipment to be the point in time when the need of consumption thereof is identified for the purpose of implementing the subsidiaries’ investment programme, i.e. the point of identification of the specific investment project in which the asset will be utilized.

2.5.23. Trade receivables

Trade receivables constitute the Group’s unconditional entitlement to consideration under contracts with customers and other counterparties (i.e. it is only dependent on the passage of time before payment of the consideration).

Initial measurement

Trade receivables are initially recognised and carried at fair value based on the transaction price, which is usually equal to the invoice amount, unless they contain a significant financial component, which is not additionally charged. In this case they are recognised at their present amount determined at a discount equal to the interest associated to the debtor.

Subsequent measurement

The Group holds trade receivables only for the purpose of collecting contractual cash flows and subsequently measures them at amortised cost less the amount of impairment accumulated for expected credit losses (Note 16).

Impairment

The Group applies the expected credit losses model for the entire term of all trade receivables, using the simplified approach under IFRS 9, and based on the matrix model for loss percentage (Note 2.5.14).

The impairment of receivables is accrued through the respective corresponding allowance account for each type of receivables within “Expected credit loss and impairment expenses on financial assets” in the consolidated statement of comprehensive income (within profit or loss for the year).

2.5.24. Trade and other payables

Trade and other current payables in the consolidated statement of financial position are presented at the original invoiced amount (acquisition cost), which is designated as the transaction’s fair value and will be paid in the future in return for the goods and services obtained.

In case of deferred payment exceeding the usual credit period, for which no additional interest payment is envisaged, or the interest substantially deviates from the usual market interest rate, payables are initially measured at their fair value based on their present value at a discount rate applicable for the Group, and subsequently – at amortised cost (Note 29).

2.5.25. Interest-bearing loans and other borrowings

In the Consolidated Statement of Financial Position, all loans and other borrowings are initially presented at acquisition cost (nominal amount) which is designated as the fair value of the transaction's deliverable, net of the direct costs related to these loans and borrowings. Following their initial recognition, interest-bearing loans and other borrowings are subsequently measured and presented in the Consolidated Statement of Financial Position at amortised cost, determined by means of the effective interest method. The amortised cost is calculated by considering all charges, commissions and other costs, including discounts and premiums associated with these loans. Gains and losses are recognised in the Consolidated Statement of Comprehensive Income (within profit or loss for the year) as finance income or expenses (interest) over the amortisation period or when the payables are written-off or reduced (Notes, 8,9, 24,25).

Interest costs are recognised for the term of the financial instrument based on the effective interest method.

Interest-bearing loans and other borrowings are classified as current, except for the portion thereof for which the Group has an unconditional right to settle its obligation within over 12 months from the end of the reporting period.

2.5.26. Equity, share premium, retained earnings and dividend

Share capital is presented at the nominal value of shares issued and paid.

Share premium includes any premiums received on issue of share capital. Any transaction costs associated with the issuing of shares are deducted from share premium, net of any related income tax benefits.

Reserves include actuarial reserves which are the present value from the acquisition date as of 31.12.2025 of the future liabilities to the personnel for benefits in case of termination of employment due to illness or after acquiring the right to a pension for length of service and age, according to IAS 19 which requires recognition of a liability when an employee has worked (provided services) in exchange for income that is payable in the future.

The present value of the payment obligations represents the present value of the expected future payments required to settle the obligation arising from the employees' seniority /work experience/ in the current and prior periods.

Retained earnings/Accumulated losses include all retained profits and uncovered losses for the holding period of subsidiaries and all current and prior period retained profits and uncovered losses of the Parent Company.

Dividend payables to shareholders/owners, if any, are included in "Related parties payables" by approval at the general meeting of shareholders/owners prior to the reporting date.

All transactions, if any, with owners of the parent are recorded separately within equity.

2.5.27. Provisions

Provisions are recognised when the Group has a present obligation (legal or constructive) as a result of a past event, there is a probability that an outflow of resources embodying economic benefits will be required to settle the obligation and a reliable estimate can be made of the amount of the obligation. Where the Group expects that some or all provision settlement costs will be recovered, for example under an insurance agreement, the reimbursement is recognised as a separate asset but only when the reimbursement is virtually certain.

Provisions are measured based on the approximate best assessment of the total amount of costs to be incurred by the Group to settle the liability. If the effect of the time value of money is material, provisions are discounted using a current pre-tax rate that reflects the risks specific to the liability. Provision

expenses are presented in the Consolidated Statement of Comprehensive Income, net of the amount of expenses recovered. Where discounting is used, the increase in the provision due to the passage of time is recognised as a financial cost (Note 30).

2.5.28. Retirement benefits

Short-term benefits

Short-term employee benefits in the form of remuneration, bonuses and social payments and benefits (payable within 12 months after the end of the period when the employees have rendered the service or have met the required terms and requirements) are recognised as an expense in the consolidated statement of comprehensive income (within profit or loss for the year), unless a specific IFRS requires this amount to be capitalised within an asset's cost, in the period when the service thereon has been rendered or the requirements for their receipt have been met and as a current liability (less any amounts already paid and deductions due) at their undiscounted amount.

At the date of the consolidated financial statements, the Group measures the estimated costs on the accumulating compensated absences, which amount is expected to be paid as a result of the unused entitlement. The measurement includes the estimated expenses on the employee's remuneration and the statutory social security and health insurance contributions due by the employer thereon.

Long-term retirement benefits

Defined contributions plans

The major duty of the Group in its capacity as an employer is to make the mandatory social security contributions for the hired employees to the Pensions Fund, the Supplementary Mandatory Pension Security (SMPS) Fund, to the General Diseases and Maternity (GDM) Fund, the Unemployment Fund, the Labour Accident and Professional Diseases (LAPD) Fund and for health insurance. The rates of social security and health insurance contributions are defined under the Law on the Budget of State Social Security and the Law on the Budget of National Health Insurance Fund for the respective year. The contributions are split between the employer and employee in line with rules of the Social Security Code (SSC). These social security and pension plans, applied by the Group in its capacity of an employer are defined contributions plans. Under these plans, the employer pays defined monthly contributions to the government funds as follows: Pensions Fund, GDM Fund, Unemployment Fund, LAPD Fund as well as to universal and professional pension funds – on the basis of rates fixed by law, and has no legal or constructive obligation to pay further contributions if the funds do not hold sufficient means to pay the respective individuals the benefits they have worked-out over the period of their service. The obligations referring to health insurance are analogous.

There is no established and functioning private voluntary social security fund at the Group.

The contributions payable by the Group under defined contribution plans for social security and health insurance, are recognised as a current expense in the consolidated statement of comprehensive income (within profit or loss for the year) unless a particular IFRS requires this amount to be capitalised to the cost of an asset, and as a current liability at their undiscounted amount along with the accrual of the respective employee benefits to which the contributions refer and in the period of rendering the underlying service.

Defined benefits plan

In accordance with the Labour Code, the Group in its capacity as an employer in Bulgaria is obliged to pay an indemnity to its personnel when coming of age for retirement, at an amount which, depending on the length of service with the entity, varies between two and six gross monthly salaries at the employment termination date. In their nature these are unfunded defined benefit schemes.
The calculation of the amount of these liabilities necessitates the participation of qualified actuaries in order to determine their present value at the date of the financial statements, at which they shall be presented in the consolidated statement of financial position, and respectively, the change in their value – in the statement of comprehensive income as follows: a) current and past service costs, interest costs and effects of curtailment and settlements are recognised immediately when incurred and are presented within current profit or loss in the item 'employee benefits expense'; and b) the effects of obligation remeasurement, which in substance represent actuarial gains and losses, are recognised immediately

when incurred and are presented within other comprehensive income in the item 'remeasurement of defined benefit pension plans'. Actuarial gains and losses arise from changes in the actuarial assumptions and experience adjustments.
At the end of each reporting period, the Group companies assign certified actuaries who provide their report with calculations regarding the long-term retirement benefit obligations. For this purpose, they apply the Projected Unit Credit Method. The present value of the defined benefit obligation is determined by discounting the estimated future cash flows, which are expected to be paid within the maturity of this obligation and using the interest rates of long-term government bonds of similar term, quoted in Bulgaria where the Group itself operates.

Termination benefits

Under the local provisions of the employment and social security legislation in Bulgaria, the Group as employer is obliged to pay upon termination of the employment contract before retirement certain types of benefits.

The Group recognises employee benefit obligations on employment termination before the normal retirement date when it is demonstrably committed, based on announced plan, to terminating the employment contract with the respective individuals without possibility of withdrawal or in case of formal issuance of documents for voluntary redundancy. Termination benefits due more than 12 months are discounted and presented in the consolidated statement of financial position at their present value.

2.5.29. Cash dividend and non-cash distribution to equity holders

The Group recognises a liability to make cash or non-cash distributions to equity holders of the parent when the distribution is authorised (i.e. approved by the shareholders) and the distribution is no longer at the discretion of the Group. A corresponding amount is recognised directly in equity.

Non-cash distributions are measured at the fair value of the assets to be distributed with fair value re-measurement recognised directly in equity.

Upon distribution of non-cash assets, any difference between the carrying amount of the liability and the carrying amount of the assets distributed is recognised within profit or loss for the year.

2.5.30. Leases

2.5.30.1. Lessee

Assessment of lease recognition

At the lease inception (the earlier of the date of a lease agreement and the date of commitment by the parties to the principal terms and conditions of the lease), the Group performs analysis and assesses whether the contract is, or contains, a lease. A contract is, or contains, a lease, if the contract conveys the right to control the use of an identified asset for a period of time in exchange for consideration.

The Group applies a uniform model for recognition and measurement of all leases, except for short-term leases (leases with a lease term of 12 months or less and which do not contain a purchase option) and leases of low value assets (such as tablets, personal computers, telephones, office equipment, etc.).

The Group has not elected to apply the practical expedient of IFRS 16, which allows a lessee, by class of underlying asset, not to separate non-lease components from lease components, and instead account for each lease component and any associated non-lease components as a single lease component. For contracts that contain a lease component and one or more additional lease or non-lease components, the Group allocates the consideration in the contract to each lease component on the basis of the relative stand-alone price of the lease component and the aggregate stand-alone price of the non-lease components.

a) right-of-use assets

The Group recognises right-of-use assets in the consolidated statement of financial position at the commencement date of the lease, i.e. the date on which a lessor makes an underlying asset available for use by the lessee.

Right-of-use assets are presented in the statement of financial position at acquisition cost, less the accumulated depreciation, impairment losses and adjustments resulting from remeasurement and adjustments to the lease liability. The acquisition cost includes:

- the amount of the initial measurement of the lease liability;
- any lease payments made at or before the commencement date, less any lease incentives received;
- any initial direct costs incurred by the Group in its capacity as lessee;
- costs for dismantling and removing the underlying asset, restoring the site on which the asset is located or restoring the underlying asset to the condition required by the terms and conditions of the lease;

The Group depreciates the right-of-use asset to the earlier of the end of the useful life of the right-of-use asset or the end of the lease term. If ownership of the asset is transferred under the lease by the end of the lease term, the Group shall depreciate it to the end of the useful life. Depreciation shall be charged from the commencement date.

The depreciation terms by types of underlying assets are as follows:

- offices and parking places for administrative needs – 5-6 years.
- real estate – municipal land – 9 years.
- energy sites and facilities – 5 years.

The Group has elected to apply the acquisition cost model for all of its right-of-use assets. Right-of-use assets are tested for impairment in accordance with IAS 36 Impairment of Assets, by applying an impairment determination and reporting policy analogous to the one for property, plant, and equipment. The recoverable amount of right-of-use assets is the higher of the fair value less disposal costs, or value in use. To determine assets' value in use, future cash flows are discounted to their present amount, by applying a pre-tax discount rate reflecting the market conditions and time value of money and the risks inherent to the respective asset. Impairment losses are determined as the difference between the recoverable and carrying amount (when the recoverable account is lower than the carrying amount) and are presented in the consolidated statement of comprehensive income as 'other expenses'.

Right-of-use assets are presented on a separate line in the consolidated statement of financial position, and depreciation thereof – within 'depreciation and amortization expenses' in the consolidated statement of comprehensive income.

b) lease liabilities

The Group recognises lease liabilities at the commencement date, measured at the present value of the lease payments that are not paid at this date. They include:

- fixed lease payments (including in-substance fixed payments), less any lease inceptives receivable;
- variable lease payments that depend on an index or rate, initially measured using the index or rate at the commencement date;
- the exercise price of the purchase options, if the lessee is reasonably certain to exercise this option;
- payments of penalties for terminating the lease, of the lease term reflects the exercise of an option to terminate the lease;
- the amount expected to be payable by the Group to lessor under residual value guarantees.

Variable lease payments that do not depend on an index or a rate, but are dependent on performance or use of the underlying asset, are not included in the measurement of the lease liability and the right-of-use asset. They are recognised as current expenses in the period when the event or circumstance resulting in these payments arises and are stated within profit or loss for the year.

Lease payments are discounted using the interest rate implicit in the lease, of that rate can be readily determined, or the Group's incremental borrowing rate, which it would have to pay to borrow over a similar term, and with a similar security, the funds necessary to obtain an asset of a similar value to the right-of-use asset in a similar economic environment.

Lease payments (instalments) contain a certain ratio of the finance cost (interest) and the respective portion of the lease liability (principal). Interest costs for the lease are presented in the statement of comprehensive income (within profit or loss for the year) for the lease period on a periodic basis, so as to achieve constant periodic rate of interest on the remaining balance of the lease liability, and are presented as “finance costs”.

Lease liabilities are stated on a separate line in the consolidated statement of financial position.

The Group subsequently measures the lease liability by:

- increasing the carrying amount to reflect the interest on the lease liability;
- reducing the carrying amount to reflect the lease payments made;
- remeasuring the carrying amount to reflect any reassessment or lease modifications of the lease;
- residual value guarantees are reviewed and if necessary, adjusted, at the end of each reporting period.

The Group remeasures the lease liabilities (and makes corresponding adjustments to the related right-of-use assets) whenever:

- the lease term has changes or there is a significant event or change in circumstances resulting in a change in the assessment of exercise of a purchase option, in which case the lease liability is remeasured by discounting the revised lease payments using a revised discount rate;
- the lease payments change due to changes in an index or rate or a change in expected payment under a residual value guarantee, in which cases the lease liability is remeasured by discounting the revised lease payments using an unchanged (original) discount rate (unless the lease payments change is due to a change in a floating interest rate, in which case a revised discount rate is used);
- a lease contract is modified and the lease modification is not accounted for as a separate lease, in which case the lease liability is remeasured based on the lease term of the modified lease by discounting the revised lease payments using a revised discount rate at the effective date of modification.

c) Short-term leases and leases of low-value assets

The Group has elected the exemption from recognition of right-of-use assets and lease liabilities under IFRS 16 for low-value leases of parking places, rental of multi-filtration water dispensers, which the Group considers to be at a low value when new and are independently used at the Group without dependence or close relation to other assets, and rental of pool car vehicles, which the Group states as short-term leases.

Payments related to short-term leases and leases of low-value assets are recognised directly as current expenses in the consolidated statement of comprehensive income (within profit or loss for the year) on a straight-line basis over the lease term.

2.5.30.2. Lessor

Leases for which the Group is a lessor are classified as finance or operating leases. Whenever the terms of the lease transfer substantially all the risks and rewards of ownership to the lessee, the contract is classified as a finance lease; all other leases are classified as operating leases.

When the Group is an intermediate lessor, it accounts for the head lease and the sublease as two separate contracts. The sublease is classified as a finance or operating lease by reference to the right-of-use asset arising from the head lease.

Operating lease

Rental income from operating leases is recognised on a straight-line basis over the term of the relevant lease. Initial direct costs incurred in obtaining an operating lease are added to the carrying amount of the leased asset and recognised on a straight-line basis over the lease term. They are stated within 'Other revenue' line of the Statement of Profit or Loss and Other Comprehensive income. (Note 5)

The underlying asset which is subject to the lease shall remain and be stated within the Group’s statement of financial position.

3. Revenue from operating activities

3.1. Information by types of revenue

The Group's revenue from contracts with customers by customer types is as follows:

	30.09.2026	***30.09.2025***
	EUR'000	*EUR'000*
Revenue from customers on open market	657 446	438 107
Household customers	415 786	387 556
Corporate customers	52 814	48 169
Revenue from access fees for connection of customers	24 716	17 612
Revenue from services for survey, repair and maintenance of the electricity distribution grid and commercial metering devices	2 512	2 423
Revenue from information, communication and technological (ICT) services	323	286
Revenue from Electricity System Security Fund	869	857
Other revenue	24 474	23 258
	1 178 940	**918 268**

The growth in **revenue from customers on open market** is driven by deviation in electricity prices and higher volumes year-on-year.

The positive deviation between **revenue from household customers** is caused by a single digit increase in the electricity consumption for the first nine months of 2026 in comparison with the same period in 2025.

The increase in revenue from **corporate customers** is caused by a pricing effect.

Revenue from **access fees for connection of customers** also marks an increase due to higher capitalized assets.

Other revenue mainly relates to balancing services.

3.2. Balances from contracts with customers

Contract assets

	30.09.2026	***31.12.2025***
	EUR'000	*EUR'000*
Contracts assets, gross	60 388	76 956
Impairment of contract assets	(2)	(125)
	60 386	**76 831**

The decrease in contract assets, being the consumed but not invoiced electricity, is caused by the seasonal cycling.

Contract liabilities

	30.09.2026	***31.12.2025***
	EUR'000	*EUR'000*
Long-term contract liabilities	18 320	17 377
Short-term contract liabilities	26 884	26 449
	45 204	**43 826**

The **long-term contract liabilities** include:

- The remaining performance obligations, which are expected to be recognized after more than one year, are related to the provision of services for connection of customers to the electricity

distribution network (EDG West), amounting to EUR 17 810 thousand (2025: EUR 16 867 thousand).
- EUR 510 thousand related to acquisition of a 10% equity interest by ELH Trade in a limited liability company (2025: EUR 510 thousand). The amount has been recognized in accordance with IFRS 9 Financial instruments, as the fair value at initial recognition differs from the transaction price and is not determined using Level 1 inputs.

The **short-term contract liabilities** include:

- Paid fees for connection to the electricity distribution network (EDG West) of EUR 10 868 thousand (2025: EUR 10 587 thousand).
- Advances for electricity supply (ELH Trade) of EUR 16 016 thousand (2025: EUR 15 862 thousand).

4. Expenses of operating activities

	30.09.2026	***30.09.2025***
	EUR'000	*EUR'000*
Expenses on electricity purchased	(894 825)	(665 318)
Technological costs from distribution of electricity	(58 235)	(48 667)
Balancing electricity	(12 307)	(13 275)
Transmission and access fees	(3 485)	(2 460)
Other expenses	(88)	(73)
	(968 940)	**(729 793)**

The rise in expenses corresponds to increased electricity consumption and price deviations compared to the last year.

Expenses on electricity purchased for End Supplier license

For the reporting period the subsidiary purchased buy energy from IBEX on a special segment and EWRC sets a base sourcing price on a yearly basis. Compensations for household consumers through end suppliers are calculated every month by EWRC according to the difference between the actual prices from transactions on IBEX and the base price determined by EWRC, and the amounts will be covered by the Electricity System Security Fund.

Technological costs from distribution of electricity

During the reporting period from 01 January 2026 to 30 September 2026, the subsidiary reported technological costs for electricity transmission after netting balancing cost in the amount of EUR 58 235 thousand (nine months 2025: EUR 48 667 thousand).

Technological costs in distribution grid are electricity costs which are related to the technological process of electricity distribution and transformation. In accordance with article 21 of the Energy Act, the Energy and Water Regulatory Commission (EWRC) approves a maximum annual level of technological costs for the relevant regulatory period, by means of adopted methodology for determination of electricity costs. The marginal technological costs are determined in accordance with the parameters of the distribution grid, volume and structure of sales by customer categories, level of voltage, precision of metering devices and other factors.

Based on the methodology adopted, the EWRC has approved a maximum annual level of technological costs as a percentage of electricity distributed through the grid. Since July 1, 2021 with Decision C-27/01.07.2021, the EWRC reduced the recognized amount for technological costs to 7.5%. With decision C-17/30.06.2024, the EWRC reduces the technological cost level to 7%. The ratio is kept with decision C-25/01.07.2025.

The monthly levels of deviations applicable to the annual coefficient of technological costs, which are approved by the EWRC, are as follows:

Month	Jan	Feb	Mar	Apr	May	Jun	Jul	Aug	Sep	Oct	Nov	Dec
Coefficient	1.38	1.31	1.31	1.1	1	1	1	1	1	1.1	1.25	1.25

In the first quarter of 2026 the Management Board of EDG West EAD adopted Standard for maximum levels of technological costs for electricity transmission for year 2026. The Standard is based on an independent analysis of the technological costs arising from electricity transmission through the distribution grid. Its objective is the effective management of technological costs for electricity distribution for the subsidiary.

Its goal is effective management of technological costs for electricity distribution for EDG West. For 2026, the marginal value of annual technological costs is set at 5.80% (2025: 5.90%). After applying the monthly deviation levels approved by the EWRC, the technological costs of the subsidiary for the period from January to September are within the maximum allowable levels.

For the period from January to September 2026 EDG West has distributed through its distribution grid 8 221 724 MWh energy from which the technological costs are 454 308 MWh. Reached level of technological cost for 2026 is 5.53%.

Compensations

- **Council of Ministers Decision № 691 of 06 October 2025 on the adoption of a Programme for Compensation of Electricity Costs of Non-Household End Customers and of Transmission and Distribution Network Operators for the Purchase of Electricity Quantities Consumed for Technological Losses for the period from 1 July 2025 to 30 June 2026.**

Under the programme adopted by Decision № 691, compensations were provided through electricity traders, suppliers of last resort, electricity producers selling directly to non-household end customers, or the operator of the organised electricity market, based on the quantities of active electricity on which the "obligation to society" price would normally be charged. Compensations were possible for the respective six-month period (from 01.07.2025 to 31.12.2025 and from 01.01.2026-30.06.2026), and only where the weighted average price for baseload on the "Day ahead" segment of Independent Bulgarian Energy Exchange EAD (IBEX) for the respective six-month period exceeded EUR 122.71/MWh.

With effect from 1 April 2026, that programme was repealed by Decision № 344 and the contracts concluded between the Electricity System Security Fund (ESSF) and the suppliers under it are deemed terminated as of the same date.

The subsidiary did not receive any compensations under this programme.

- **Council of Ministers Decision № 344 of 30 April 2026 on the adoption of a Programme for Compensation of the Costs of Non-Household End Customers for Electricity and of the Transmission and Distribution Network Operators for the Purchase of Electricity Quantities Consumed for Technological Losses for the period from 1 April 2026 to 30 June 2027, and on the repeal of Council of Ministers Decision № 691 of 2025.**

Under the new programme, compensation is determined on a monthly basis and is granted for those months in which the average monthly price for baseload on the "Day ahead" segment of IBEX exceeds EUR 122.71/MWh. The amount of compensation is up to 80% of the difference between the average exchange price for the respective month and the base price of EUR 122.71/MWh. No compensation is due to customers whose weighted average price is below the base price. Compensation is provided from IBEX.

For the reporting period, the subsidiary accrued compensation amounting to EUR 560 thousand, which has not yet been received.

- **Council of Ministers Decision № 730 of 18 September 2026 on the adoption of a Programme for Compensation of the Costs of Non-Household End Customers for Electricity and of the Transmission and Distribution Network Operators for the Purchase of Electricity Quantities Consumed for Technological Losses for the period from 1 September 2026 to 30 June 2027. In addition, this decision extends the period of Decision № 344 from 1 July 2026 until 31 August 2026.**

Under the new programme, compensation is paid at the end of the 10 months period (30 September 2026 – 30 June 2027) at maximum amount equal to 80% of the difference between average price at "Day ahead" segment of IBEX exceeding EUR 122.71/MWh. In case that during this period for a particular month the average price at "Day ahead" segment of IBEX exceeds EUR 180/MWh, a compensation is provided for this exact month at 80% of the difference between the average price and EUR 180/MWh. The compensation that has to be paid at the end of the 10 months period have to be decreased with the amount of provided monthly compensations. Through a separate act after June 30, 2027, the Council of Ministers shall determine the specific compensation percentage for the ten-month period.

For the reported period the subsidiary did not receive any compensations under this programme.

5. Other revenue

	30.09.2026	***30.09.2025***
	EUR'000	*EUR'000*
Rentals	1 304	1 318
Revenue under art. 56, para. 1 Rules for Measuring	592	401
	1 896	**1 719**

For the reporting period from 01 January to 30 September 2026, the Group's other revenues are generated from the activities of EDG West.

The Group treats as other revenue rental income from the operating lease of property, plant and equipment, and revenue from amounts billed upon established incomplete or inaccurate measurement pursuant to Art. 56 (1) of the Electricity Metering Rules.

6. Other income

	30.09.2026	***30.09.2025***
	EUR'000	*EUR'000*
Payables written-off	-	30
Excess of fixed assets and materials, net gains from sale, scrap	1 157	752
Government grants	1 353	-
Net gain/(loss) from the sale of goods	16	28
Penalty fees from clients and vendors	6 795	2 506
Other operating income, net	1 158	957
	10 479	**4 273**

7. Other operating expenses

	30.09.2026	***30.09.2025***
	EUR'000	*EUR'000*
Expenses on materials and consumables	(5 165)	(4 635)
Hired services expenses	(26 135)	(30 035)
Employee benefit expenses	(59 794)	(54 887)
Other operating expenses	(5 211)	(2 823)
	(96 305)	**(92 380)**

The growth in employee benefit expenses is caused by an increase in base salaries effective from January 2026.

Transaction costs of EUR 5.4 mm incurred on the bond issue were recognised in full as hired services expenses in the interim financial statements for the first half of 2025. In the annual audited financial statements, EUR 5.0 mm of these costs were instead capitalised as part of the carrying amount of the bond liability and are amortised over the term of the bond using the effective interest method, in accordance with IFRS 9. The remaining EUR 0.4 million continued to be recognised as an expense, as related to refinancing.

8. Finance expenses

	30.09.2026	***30.09.2025***
	EUR'000	*EUR'000*
Interest expenses on loans, incl.:	(26 776)	(38 577)
Interest expenses on bank loans	*(1 124)*	*(10 849)*
Interest expenses on bond notes	*(24 241)*	*(12 377)*
Amortized costs under the SFA dated 03.06.2024	*-*	*(5 972)*
Amortized costs under bond issue	*(1 411)*	*(343)*
Interest expense from termination of cash flow hedges	*-*	*(9 036)*
Interest expenses on lease liabilities	(713)	(773)
Financial expenses on SWAP contracts	(5 464)	-
Other finance costs	(1 941)	(2 290)
	(34 894)	**(41 640)**

In compliance with IFRS 9 Financial instruments the Group reports its bank loans and bond obligations at amortised costs net of directly attributable transaction costs. During the lifetime of the bank loans and bond issue transaction costs are expensed via the effective interest rate method.

In relation to the Senior Facilities Agreement dated 03.06.2024 the Parent Company entered into Hedge agreements to mitigate the risk of EURIBOR rise, hedging partially the principal value via interest rate swap. Following the bond issue, which bears interest expense under fixed interest rate, the hedge agreements were terminated with effect from 15 May 2025 with repayment date 20 May 2025.

For the reporting period from 01 January to 30 September 2026, the Group's other financial costs are from foreign exchange differences, bank fees and charges for bank guarantees and revaluation of financial instruments.

9. Finance income

	30.09.2026	***30.09.2025***
	EUR'000	*EUR'000*
Interest income	4 689	2 657
Other finance income	2 210	3 095
	6 899	**5 752**

For the reporting period from 01 January to 30 September 2026, the Group's other financial income is from revaluation of financial instruments.

10. Recovered/(accrued) impairment loss on financial assets

	30.09.2026	***30.09.2025***
	EUR'000	*EUR'000*
Recovered impairment of receivables	103	976
(Accrued) impairment of receivables	(1 500)	(705)
Recovered/ (accrued) impairment of cash in bank accounts	-	-
	(1 397)	**271**

11. Income tax

11.1. Income tax expenses

	30.09.2026	*30.09.2025*
	EUR'000	*EUR'000*
Corporate income tax expenses	(7 817)	(7 458)
Global income tax expenses	(82)	-
Deferred tax (expenses)/revenue	121	816
	(7 778)	**(6 642)**

The applicable income tax rate in the Netherlands for 2026 is 19% (2025: 19%) which applies to the first bracket amounting to EUR 200,000 (2025: EUR 200,000). The standard tax rate of 25.8% (2025: 25.8%) applies to the taxable income exceeding the first bracket. As at 30 September 2026 the financial result of the Parent Company is a profit generated by dividend income, which is not taxable.

The applicable income tax rate in subsidiaries' country of operation - Republic of Bulgaria for 2026 is 10%.

Due to the size of the economic activity of the Starcom Holding AD group, to which the Group belongs, it is subject to additional corporate tax in accordance with the changes in the Corporate Income Tax Act, which are effective from January 1, 2024. During the period, the Group to which the Electrohold Group made an estimate of the applicable tax legislation to determine the potential exposure to tax liabilities under Pillar Two. The entity performed this assessment based on current information available regarding the Group entities' operations, as well as applicable effective tax rates in each affected jurisdiction and prior year and expected effective tax rates, adjusted for Pillar Two disallowed deductions, for each affected jurisdiction. Based on this assessment, there are no top-up tax necessary at the Parent Company. Based on this assessment, an accrual equal to 3% of the subsidiaries' profit before tax has been recognized in respect of global income tax expenses for 2025 (and 2024). In the first half of 2026, all subsidiaries filed their declarations for national top-up tax for 2024 within the statutory deadlines, and the final calculations resulted in an additional tax expense of EUR 82 thousand.

11.2. Deferred tax assets

	30.09.2026	*31.12.2025*
	EUR'000	*EUR'000*
Deferred tax assets	2 618	2 618
	2 618	**2 618**

11.3. Deferred tax liabilities

	30.09.2026	*31.12.2025*
	EUR'000	*EUR'000*
Deferred tax liabilities	6 975	7 097
	6 975	**7 097**

12. Property, plant and equipment

Non-current tangible assets, acquired upon subsidiaries purchase:

	Land and Buildings	*Machinery, Technical equipment and Vehicles*	*Construction in progress*	***Total***
	EUR'000	*EUR'000*	*EUR'000*	***EUR'000***
Cost value:				
At 1 January 2025	**58 769**	**514 330**	**27 650**	**600 749**
Additions	1 893	61 872	91 495	155 260
Disposals	(28)	(6 535)	(63 761)	(70 324)
At 31 December 2025	**60 634**	**569 667**	**55 384**	**685 685**
Additions	1 373	69 905	71 948	143 226
Disposals	(19)	(481)	(70 892)	(71 392)
At 30 September 2026	**61 988**	**639 091**	**56 440**	**757 519**
Depreciation:				
At 1 January 2025	**6 772**	**141 331**	**-**	**148 103**
Depreciation for the period	1 827	49 467	-	51 294
Depreciation written off	(14)	(5 999)	-	(6 013)
At 31 December 2025	**8 585**	**184 799**	**-**	**193 384**
Depreciation for the period	1 254	39 458	-	40 712
Depreciation written off	-	(427)	-	(427)
At 30 September 2026	**9 839**	**223 830**	**-**	**233 669**
Carrying amount:				
At 31 December 2025	**52 049**	**384 868**	**55 384**	**492 301**
At 30 September 2026	**52 149**	**415 261**	**56 440**	**523 850**

The Group has not pledged property, machinery, equipment as collateral for its obligations.

13. Other intangible assets

Non-current intangible assets, acquired upon subsidiaries purchase:

	Computer software	*Rights, licenses and other*	*Client relationships*	***Total***
	EUR'000	*EUR'000*	*EUR'000*	***EUR'000***
Cost value:				
At 1 January 2025	**9 344**	**34 308**	**16 515**	**60 167**
Additions	619	4 773	-	5 392
Disposals	-	(1 504)	-	(1 504)
At 31 December 2025	**9 963**	**37 577**	**16 515**	**64 055**
Additions	3 419	3 550	-	6 969
Disposals	(15)	(4 132)	-	(4 147)
At 30 September 2026	**13 367**	**36 995**	**16 515**	**66 877**
Amortization:				
At 1 January 2025	**3 999**	**8 897**	**4 090**	**16 986**
Amortization for the period	2 023	2 567	1 197	5 787
Amortizations written off	-	(669)	-	(669)
At 31 December 2025	**6 022**	**10 795**	**5 287**	**22 104**
Amortization for the period	2 089	1 858	898	4 845
Amortizations written off	(2)	(4)	-	(6)
At 30 September 2026	**8 109**	**12 649**	**6 185**	**26 943**
Carrying amount:				
At 31 December 2025	**3 941**	**26 782**	**11 228**	**41 951**
At 30 September 2026	**5 258**	**24 346**	**10 330**	**39 934**

The Group has not pledged intangible assets as collateral for its liabilities.

14. Financial assets - non current

	30.09.2026	***31.12.2025***
	EUR'000	*EUR'000*
Non-current financial assets	515	515
	515	**515**

In 2025, Electrohold Trade began to expand its role as an electricity trader and balancing group coordinator to that of an energy capacity aggregator. The company launched a high-tech energy asset management platform that enables power plants and customers to participate in the electricity market and related services. The energy facility aggregation model will become increasingly important with the decentralization of electricity production. It helps to use RES more efficiently, provides access to the market to small producers and, accordingly, contributes to increasing the stability of electricity systems.

In connection with this new activity, Electrohold Trade acquired a 10% stake in a company engaged in the construction and operation of electricity storage facilities. The subsidiary does not have control or significant influence over the investee. As a result, the investment has been classified as a financial asset in accordance with IFRS 9 and is accounted for at fair value through profit or loss.

15. Inventories

	30.09.2026	***31.12.2025***
	EUR'000	*EUR'000*
Inventories	24 147	21 964
	24 147	**21 964**

16. Trade and other receivables

	30.09.2026	***31.12.2025***
	EUR'000	*EUR'000*
Trade receivables, gross	117 443	111 717
Impairment of trade receivables	*(33 379)*	*(35 626)*
Court receivables, gross	25 022	21 680
Impairment of court receivables	*(23 692)*	*(20 480)*
Compensations	24 196	29 899
VAT	8 557	14 710
Other taxes	-	10
Other receivables, gross	120 386	122 577
Impairment of other receivables	*(6 037)*	*(6 251)*
	232 496	**238 236**

Trade receivables paid within the due date are non-interest bearing and interest is due after the expiry of their term. Trade receivables from customers are denominated in EUR and are incurred in connection with the sale of electricity, distribution of electricity, services provided and other within the scope of supply of the Group. The Group has determined a usual credit period of up to 30 days in which it does not charge interest to customers, except in the cases of signing deferred payment agreements, pursuant to which a longer repayment plan and interest payments are determined.

Compensations

Electrohold Sales

Since 1st July 2025 End suppliers buy energy from IBEX on a special segment and EWRC sets a base sourcing price on a yearly basis. Compensations for household consumers through end suppliers are calculated every month by EWRC according to the difference between the actual prices from transactions on IBEX and the base price determined by EWRC, and the amounts will be covered by the Electricity System Security Fund.

The outstanding receivables for these compensations amount to EUR 16 280 thousand as of 30 September 2026 (2025: EUR 29 739 thousand).

Following a change in the legislation since 1st July 2025 End suppliers purchase the electricity from RES producers on its territory at preferable price but then sells it on IBEX in special segment. The difference between purchase and sale price is calculated and covered by ESSF via Compensations. Previously this energy was purchased from RES producers and sold to National Electricity Company on same price.

The outstanding receivables for these compensations amount to EUR 1 176 thousand as of 30 September 2026 (2025: EUR 145 thousand).

Under the government compensation programme adopted by Council of Ministers Decision No. 344 of 30 April 2026, non-household end customers are compensated for the cost of electricity in months when the average monthly day-ahead market price exceeds EUR 122.71/MWh. The compensation is passed on to eligible customers by their electricity supplier as a reduction of the invoiced amount and is subsequently reimbursed to the supplier under the programme. As of 30 September 2026, the outstanding receivables for these compensations amount to EUR 1 033 thousand (2025: EUR 0 thousand).

By Decision No. 87/2025 of the Council of Ministers, targeted financial support was provided to households that were left without electricity in December 2024. The compensations are reflected in customers' bills after this period.

The outstanding receivables for these compensations amount to EUR 4 thousand as of 30 September 2026 (2025: EUR 15 thousand).

Electrohold Trade

Under the government compensation programme adopted by Council of Ministers Decision No. 344 of 30 April 2026, non-household end customers are compensated for the cost of electricity in months when the average monthly day-ahead market price exceeds EUR 122.71/MWh. The compensation is passed on to eligible customers by their electricity supplier as a reduction of the invoiced amount and is subsequently reimbursed to the supplier under the programme. As of 30 September 2026, the outstanding receivables for these compensations amount to EUR 5 143 thousand (2025: EUR 0 thousand).

Electrodistribution Grid West

Under the government compensation programme adopted by Council of Ministers Decision No. 344 of 30 April 2026, electricity transmission and distribution operators are compensated for the cost of electricity purchased to cover technological losses when the average monthly day-ahead market price exceeds EUR 122.71/MWh. For the reporting period, the subsidiary recognized a receivable of EUR 560 thousand as of 30 September 2026 (2025: EUR 0 thousand).

Trade receivables pledged as collateral to third parties:

Electrohold Sales EAD

Collaterals established in favors of UniCredit Bulbank AD upon contract for undertaking credit commitments under an overdraft loan № 00052/730/29.07.2024 are:

- First special pledge on a set of current and future receivables of Electrohold Sales EAD under concluded contracts with specified counterparties with minimum amount at each single period of EUR 22 220 thousand.
- Financial security in the form of a pledge on all current and future receivables of the Borrower on all accounts in national and foreign currency, of which they are holders with the Bank.

Electrohold Trade EAD

Collaterals established in favors of UniCredit Bulbank AD upon contract for undertaking credit

commitments under an overdraft loan № 00055/730/09.09.2024 are:

- First special pledge on a set of current and future receivables of Electrohold Trade EAD under concluded contracts with specified counterparties with minimum amount at each single period of EUR 31 823 thousand.
- Financial security in the form of a pledge on all current and future receivables of the Borrower on all accounts in national and foreign currency, of which they are holders with the Bank.

Advances and prepayments, other receivables

	30.09.2026	***31.12.2025***
	EUR'000	*EUR'000*
Advances paid	40 373	41 523
Prepaid expenses	4 919	4 455
	45 292	**45 978**

17. Financial assets – current

	30.09.2026	***31.12.2025***
	EUR'000	*EUR'000*
Open-end investment funds at FVPL	38 568	22 519
	38 568	**22 519**

18. Related party transactions

Parent Company:

The Group is a subsidiary of Eastern European Electric Company III B.V. which owns 100% of Eastern European Electric Company B.V.'s shares. In turn, Eastern European Electric Company B.V. owns 100% of the shares of all its sole owned subsidiaries: Electrodistribution Grid West EAD (together with its sole owned subsidiary Electrohold ICT EAD), Electrohold Sales EAD (together with its sole owned subsidiaries Electroto EOOD and Energoto EOOD), Electrohold Trade EAD, Electrohold Bulgaria EOOD (together with its sole owned subsidiary Electrohold EPC EOOD), Free Energy Project Oreshets EOOD), Bara Group EOOD and 60% in EPC Electric OOD (through Electrohold EPC EOOD).

On July 15, 2021 100% of Eastern European Electric Company B.V.'s shares were contributed by Eastern European Electric Company II B.V. to Eastern European Electric Company III B.V. as non-obliged share premium contribution *(niet-bedongen agiostorting).*

As of 30 September 2026, the sole shareholder of the Parent Company is Eastern European Electric Company III B.V.

Ultimate owner:

Eurohold Bulgaria AD is controlled by Starcom Holding AD – a joint stock company, established and existing under the laws of the Republic of Bulgaria, registered in the Commercial Register at the Registry Agency with UIC 121610851 with registered office and management address: Republic of Bulgaria, 1592 Sofia, 43 Christopher Columbus Blvd.

As at 30 September 2026, Starcom Holding AD owns 76.44 % participation in share capital of Eurohold Bulgaria AD.

Majority shareholder of Starcom Holding AD: AH Capital Establishment, Liechtenstein.

Ultimate Parent Company: Red Peak Foundation, Liechtenstein.

Economic group:

The Group is a part of the economic group of Eurohold Bulgaria and in this sense related parties are listed below:

Energy sector
Company
Eastern European Electric Company II B.V., Netherlands*
Eastern European Electric Company III B.V., Netherlands, through Eastern European Electric Company II B.V., Netherlands
Eastern European Electric Company B.V., Netherlands through Eastern European Electric Company III B.V.
Indirect participation through Eastern European Electric Company B.V.: Electrodistribution Grid West EAD and/or Electrorazpredelitelni mreji Zapad EAD, Bulgaria, owned by EEEC B.V., the Netherlands
Electrohold ICT EAD, Bulgaria through Electrodistribution Grid West EAD
Electrohold Sales EAD, Bulgaria, owned by EEEC B.V., the Netherlands
Energoto EOOD, Bulgaria through Electrohold Sales EAD, Bulgaria, since 10.2025
Electroto EOOD, Bulgaria through Electrohold Sales EAD, Bulgaria, since 10.2025
Electrohold Trade EAD, Bulgaria, owned by EEEC B.V., the Netherlands
Free Energy Project Oreshets EOOD, Bulgaria, owned by EEEC B.V., the Netherlands
Bara Group EOOD, Bulgaria, owned by EEEC B.V., the Netherlands
Electrohold Bulgaria EOOD, Bulgaria, owned by EEEC B.V., the Netherlands
Electrohold EPC EOOD, Bulgaria through Electrohold Bulgaria EOOD
DZZD EM, since 04.02.2025 – joint operation of Electrohold EPC EOOD, Bulgaria.
EPC Electric OOD, Bulgaria through Electrohold EPC EOOD since 07.2025
Electrohold Green EOOD, Bulgaria* - subsidiary of Eurohold Bulgaria AD
**Eurohold's direct participation*

Solars Energy AD, Bulgaria - subsidiary of Eurohold Bulgaria AD since 09.06.2026
Indirect participation through Solars Energy AD:
Solaris Holding AD, Bulgaria, owned 50 % by Solars Energy AD, BG
SBR 22 OOD, Bulgaria, owned by Solaris Holding AD, BG, non-operational
Solaris Parks EAD, Bulgaria, owned by Solaris Holding AD, BG
Mega Hold Bulgaria EOOD, Bulgaria, owned by Solaris Parks EAD, BG
Solar O EOOD, Bulgaria, owned by Solaris Parks EAD, BG
Solar O 2 OOD, Bulgaria, owned by Solaris Parks EAD, BG
Mega Balance System EOOD, Bulgaria, owned by Solaris Parks EAD, BG
MD Green EOOD, Bulgaria, owned by Solaris Parks EAD, BG
PV Plants EOOD, Bulgaria, owned by Solaris Parks EAD, BG
Capital Management – 2002 EOOD, Bulgaria, owned by Solaris Parks EAD, BG
PV Energy Ihtiman EOOD, Bulgaria, owned by Solaris Parks EAD, BG
Top Energy Solutions EOOD, Bulgaria, owned by Solaris Parks EAD, BG
Top Energy Solutions 2 EOOD, Bulgaria, owned by Solaris Parks EAD, BG
Solar P 1 EOOD, Bulgaria, owned by Solaris Parks EAD, BG
Solar P 3 EOOD, Bulgaria, owned by Solaris Parks EAD, BG
Projects Ihtiman EOOD, Bulgaria, owned by Solaris Parks EAD, BG, non-operational
Solar IH EOOD, Bulgaria, owned by Solaris Parks EAD, BG, non-operational
Solar ChM EOOD, Bulgaria, owned by Solaris Parks EAD, BG, non-operational
Solar Vramis EOOD, Bulgaria, owned by Solaris Parks EAD, BG
Struma Solar Plant EOOD, Bulgaria through Solar Vramis EOOD, BG
Elbalans EOOD, Bulgaria through Solar Vramis EOOD, BG
Mega Hold 3 EOOD, Bulgaria through Solar Vramis EOOD, BG
S Solar EOOD, Bulgaria, owned by Solars Energy AD, BG
Belozem Solar Park 2 OOD, Bulgaria owned 50 % through S Solar EOOD, BG
Dupnitza Solar AD, Bulgaria owned 50 % through S Solar EOOD, BG
Belozem Solar Park 3 OOD, Bulgaria through Dupnitza Solar AD, BG
Dupnitza Solar Propco EAD, Bulgaria through Dupnitza Solar AD, BG

BESS Storage Energy AGE GR3 Gamma S.M.P.C., Greece, owned by Solars Energy AD, BG
Sofia Battery Park OOD, Bulgaria, owned 50 % by Solars Energy AD, BG, non-operational

Other related parties
Mega Eco Energy OOD, Bulgaria – associated participation of Starcom Holding AD, since 06.2025
Insurance Company Euroins AD, Bulgaria – participation of Starcom Holding AD, since 07.2026
Insurance Company Euroins Life EAD, Bulgaria– participation of Starcom Holding AD, since 07.2026
Electriccity OOD, Bulgaria – minority shareholder of EPC Electric OOD

Finance Sector
Euro-Finance AD, Bulgaria* - classified as assets held for sale as at 30.09.2026

**Eurohold's direct participation*

The following table provide the total amount of transactions for the relevant period by companies:

		Sales to related parties	*Purchases from related parties*	*Receivables from related parties*	*Payables to related parties*
		EUR'000	*EUR'000*	*EUR'000*	*EUR'000*
		30 September	*30 September*	*30 September /31 December*	*30 September /31 December*
Eastern European Electric Company II B.V.	2026	-	-	264	-
	2025	-	-	199	-
Eastern European Electric Company III B.V.	2026	-	-	65	-
	2025	-	-	41	-
Euroins Insurance Group AD	2026	-	-	-	-
	2025	-	-	-	-
Eurohold Bulgaria AD	2026	-	17	15	-
	2025	-	5	2	-
Euroins Bulgaria AD	2026	26	3 500	498	174
	2025	20	1 994	1 321	210
Euroins Life EAD	2026	-	491	7	-
	2025	-	10	1	1
Euro-Finance AD	2026	-	58	-	-
	2025	-	34	-	-
DZZD EM	2026	-	-	-	-
	2025	-	-	77	-
Mega Eco Energy OOD	2026	2 071	4 835	2 953	4 095
	2025	-	-	1 080	-
Solaris Holding AD	2026	41	-	2 730	-
	2025	-	-	-	-
Electriccity OOD - related party since 07.2025	2026	-	63	4	-
	2025	-	-	2	46
Vedernik EAD-related party until 09.2025	2026	-	-	-	-
	2025	8	-	-	-
Belozem Solar Park 2 OOD	2026	765	9 553	340	2 599
	2025	-	-	-	-
Belozem Solar Park 3 OOD	2026	943	10 213	1 915	4 119
	2025	-	-	-	-
Mega Hold Bulgaria EOOD	2026	399	1 924	618	828
	2025	-	-	-	-

Solar O EOOD	2026	394	1 904	450	848
	2025	-	-	-	-
Solar O2 EOOD	2026	256	1 306	399	664
	2025	-	-	-	-
Mega Balance Systems EOOD	2026	227	675	75	232
	2025	-	-	-	
MD Green EOOD	2026	227	673	73	230
	2025				
PV Plants EOOD	2026	255	3 530	122	974
	2025				
Capital Management – 2002 EOOD	2026	452	1 330	141	458
	2025				
PV Energy Ihtiman EOOD	2026	351	1 947	132	528
	2025	-	-	-	-
Top Energy Solutions EOOD	2026	213	3 758	1 513	2 096
	2025				
Solar P1 EOOD	2026	335	1 492	126	960
	2025	-	-	-	-
Solar P3 EOOD	2026	231	980	84	622
	2025	-	-	-	
Elbalans EOOD	2026	1 450	3 266	468	1 246
	2025				
Mega Hold 3 EOOD	2026	1 666	3 278	601	2 940
	2025				
Total	**2026**	**10 302**	**54 793**	**13 593**	**23 613**
	2025	**28**	**2 043**	**2 723**	**257**

18.1. Receivables from related parties

	30.09.2026	***31.12.2025***
	EUR'000	*EUR'000*
Sales receivables	10 364	2
Prepaid expenses	512	318
Other	2 717	2 403
	13 593	**2 723**

18.2. Payables to related parties

	30.09.2026	***31.12.2025***
	EUR'000	*EUR'000*
Sales	21 212	256
Other payables to related parties - short term	2 401	1
	23 613	**257**

Unless otherwise stated, none of the transactions incorporate special terms and conditions and no guarantees were given or received. Outstanding balances are usually settled in cash, via bank transfers.

19. Cash and cash equivalents

	30.09.2026	***31.12.2025***
	EUR'000	*EUR'000*
Cash in bank accounts and cash equivalents	77 887	115 422
Impairment of cash in bank accounts	*(673)*	*(607)*
	77 214	**114 815**

The Group's available cash in current bank accounts is in highly rated banks.

The Group carries as ***cash in transit*** the amounts of receivables from customers collected at 30 September from intermediary partners, which have not yet been received at the Group's current accounts. As at 30 September 2026 the amount of cash in transit is EUR 30 080 thousand. The period agreed with intermediaries, within which they should transfer the amounts collected to the Group, is from 3 to 6 days, depending on the area where the customers and intermediaries' offices are located. The usual period in which the Group performs full collection of the amounts due for a given period by intermediaries is up to 60 days.

Cash equivalents of the Group represent: deposits which include term deposits in EUR at the amount of EUR 416 thousand with maturity from one to three months.

20. Share capital

	30.09.2026	***31.12.2025***
	EUR'000	*EUR'000*
Share capital	1	1
	1	**1**

The issued and paid-up share capital of the Parent Company amounts to EUR 1 thousand divided into 1,000 ordinary shares of EUR 1 each. On 15 July 2021 a 100% of the Parent Company's shares were contributed by Eastern European Electric Company II B.V. to Eastern European Electric Company III B.V. as non-obliged share premium contribution (niet-bedongen agiostorting). As at 30 September 2026, the sole shareholder of the Parent Company is Eastern European Electric Company III B.V.

21. Share premium

	30.09.2026	***31.12.2025***
	EUR'000	*EUR'000*
Balance as at 1 January	**28 990**	**45 740**
Contributions/(distributions)	950	(16 750)
Balance as at 30 September/31 December	**29 940**	**28 990**

Proceeds received in addition to the nominal value of the shares issued during the period have been included in share premium, less registration and other regulatory fees and net of related tax benefits.

On 3rd January 2025 the management of the Parent Company approved a distribution in cash of EUR 300 thousand to the sole shareholder Eastern European Electric Company III B.V. by way of a share premium distribution at the charge of the share premium reserves which are maintained by the Parent Company for the benefit of its shareholders, approved by the General Meeting on 03rd January 2025 and respectively paid on 3rd January 2025.

On 30th April 2025 the management of the Parent Company approved a distribution in cash of EUR 12 200 000 to the sole shareholder Eastern European Electric Company III B.V. by way of a share premium distribution at the charge of the share premium reserves which are maintained by the Parent Company for the benefit of its shareholders, approved by the General Meeting on30th April 2025 and respectively paid on 21st May 2025.

On 8th December 2025 the management of the Parent Company approved a distribution in cash of EUR 4 250 000 to the sole shareholder Eastern European Electric Company III B.V. by way of a share premium distribution at the charge of the share premium reserves which are maintained by the Parent Company for the benefit of its shareholders, approved by the General Meeting on 8th December 2025 and respectively paid on 10th December 2025.

On 8th June 2026 the management of the Parent Company approved a distribution in cash of EUR 4 250 000 to the sole shareholder Eastern European Electric Company III B.V. by way of a share premium distribution at the charge of the share premium reserves which are maintained by the Parent

Company for the benefit of its shareholders, approved by the General Meeting on 8th June 2026 and respectively paid on 11th June 2026.

On 24th June 2026, on the basis of the Share Premium Contribution Agreement from 5th June 2026, the sole shareholder of the Parent Company - Eastern European Electric Company III B.V. made a cash share premium contribution to the share premium reserve of EEEC B.V. in the amount of EUR 5 200 000, duly received on bank account of EEEC B.V. on 24th June 2026.

22. Reserve from remeasurement of defined benefit plans

	30.09.2026	***31.12.2025***
	EUR'000	*EUR'000*
Actuarial reserve	(1 188)	(1 188)
	(1 188)	**(1 188)**

23. Cash flow hedge reserve

	30.09.2026	***31.12.2025***
	EUR'000	*EUR'000*
Balance as at 1 January	**-**	(9 216)
Result on cash flow hedges	-	97
Reclassification of cash flow hedge reserve to profit or loss	-	9 119
Balance as at 30 September/31 December	**-**	**-**

Upon discontinuation of the cash flow hedge by the Parent Company, the amounts previously accumulated in the cash flow hedge reserve were reclassified to the profit and loss statement.

24. Bond issue

	30.09.2026	***31.12.2025***
	EUR'000	*EUR'000*
Long-term portion of bond issue	493 162	491 751
Short-term portion of bond issue	12 309	20 568
	505 471	**512 319**

EEEC B.V.

On 15 May 2025 Eastern European Electric Company B.V. issued a Guaranteed Secured Notes amounting to EUR 500 000 thousand with five-year maturity (15 May 2030), secured, offered and sold under Regulation S/Rule144A, with a fixed annual coupon of 6.500%. The settlement took place on 15 May 2025. The net proceeds, after deduction of commissions and expenses, are used to repay the Senior Facility Agreement dated 3 June 2024 and related expenses in full, for general corporate purposes and to make certain payments as dividends in connection with scheduled and early prepayments of a portion of the HoldCo Facility dated 3 June 2024 of Eastern European Electric Company II B.V. Bond notes are listed on Luxembourg Stock Exchange, market segment Euro MTF under ISIN XS3073101712 for Regulation S (Non-U.S.) and under ISIN XS3073621552 for Rule 144A (U.S.).

	30 September 2026	31 December 2025
	EUR'000	EUR'000
Bond issue	500 000	500 000
Interest accrued	12 309	20 568
Deferred expenses	(6 838)	(8 249)
	505 471	**512 319**

Reconciliation of bond issue

	Bond issue EUR'000
01 January 2026	**512 319**
Cash flows:	
Proceeds under Bond issue	-
Repayment under Bond issue	-
Interest payment under Bond issue	(32 500)
Non-cash:	
Accrued effective interest	25 652
30 September 2026	**505 471**

Collateral under the Notes provided by the Group

The due payment of all sums expressed to be payable by the Issuer under the Notes is unconditionally and irrevocably, jointly and severally guaranteed by the subsidiary companies of EEEC B.V. - Electrohold Bulgaria EOOD and Free Energy Project Oreshets EOOD (together, the "Guarantors") pursuant to the guarantee contained in the trust deed dated 15 May 2025 executed among the Issuer, the Guarantors and BNY Mellon Corporate Trustee Services Limited (the "Trustee") (the "Trust Deed") (the "Guarantees").

In addition to the Guarantees, the Notes are secured by additional security package, comprising of:

Security granted by EEEC III B.V., as direct parent of the Issuer

- Pledge over the shares in the capital of the Issuer in favour of GLAS Trust Corporation Limited, as security agent under the Notes (the "**Security Agent**") pursuant to Dutch law notarial deed of pledge, dated 25 June 2025.

Security granted by EEEC III B.V., as direct parent (sole shareholder) of the Issuer, and the Issuer

Pledge over all present and future receivables of EEEC III B.V. and the Issuer, established under Dutch law, in favour of the Security Agent pursuant to Dutch Receivables Pledge, dated 25 June 2025.

Security granted by the Issuer EEEC B.V.

- Pledge over all of the Issuer's present and future rights and claims arising against any bank or financial institution in the Federal Republic of Germany (with which the Issuer maintains or will establish an account relationship) from or in relation to any such accounts, established under German law, in favour of the Security Agent under the Account Pledge Agreement, dated 17 June 2025.
- Special pledge on any and all present or future cash receivables of the Issuer against the respective bank in relation to the Bulgarian bank accounts of the Issuer, established under Bulgarian law, in favour of the Security Agent under Special Pledge Agreement on Receivables, dated 04 June 2025.
- Special pledge over all present and future shares and present and future cash receivables from shares (including dividends and other cash proceeds) from the share capital of Electrohold Sales, established under Bulgarian law, in favour of the Security Agent under Special Share Pledge Agreement, dated 04 June 2025.
- Financial collateral share pledge over all present and future shares and present and future cash receivables from shares (including dividends and other cash proceeds) from the share capital of Electrohold Sales, established under Bulgarian law, in favour of the Security Agent under Share Pledge Financial Collateral Agreement, dated 04 June 2025.
- Special pledge over all present and future cash receivables from present and future shares (including dividends and other cash proceeds) from the share capital of Electrodistribution Grid West (EDG West), established under Bulgarian law, in favour of the Security Agent under Special Pledge Agreement on Share Receivables, dated 04 June 2025.
- Commercial pledge over all present and future shares from the share capital of Electrohold Trade, established under Bulgarian law, in favour of the Security Agent under Commercial Share Pledge Agreement, dated 04 June 2025.

- Special pledge over all present and future participatory shares and present and future cash receivables from participatory shares (including dividends and other cash proceeds) from the capital of Electrohold Bulgaria, established under Bulgarian law, in favour of the Security Agent under Special Participatory Shares Pledge Agreement, dated 04 June 2025.
- Special pledge over all present and future participatory shares and present and future cash receivables from participatory shares (including dividends and other cash proceeds) from the capital of Free Energy Project Oreshets, established under Bulgarian law, in favour of the Security Agent under Special Participatory Shares Pledge Agreement, dated 04 June 2025.

Security granted by Electrohold Bulgaria

- Special pledge over all present and future participatory shares and present and future cash receivables from participatory shares (including dividends and other cash proceeds) from the capital of Electrohold EPC, established under Bulgarian law, in favour of the Security Agent under Special Participatory Shares Pledge Agreement, dated 04 June 2025

Security granted by FEPO

- Special pledge on any and all present or future cash receivables of FEPO against the respective bank in relation to the respective bank accounts of FEPO and any present or future cash receivables under contract, established under Bulgarian law, in favour of the Security Agent under Special Pledge Agreement on Receivables, dated 04 June 2025

25. Bank loans

	30.09.2026	***31.12.2025***
	EUR'000	*EUR'000*
Long-term portion of bank loans	3 039	13 859
Short-term portion of bank loans	13 902	7 543
	16 941	**21 402**

Electrodistribution Grid West

On 2 November 2016, Electrodistribution Grid West and the **European Bank for Reconstruction and Development** concluded a loan agreement amounting to EUR 116 000 thousand of which EUR 98 000 thousand are for investment purposes and EUR 18 000 thousand for working capital.

The maturity date of the loan was 31 October 2023. Drawdown of the loan takes place in parts, and in 2016 the first advance of EUR 15 000 thousand.

In May 2017, the Company received a new advance of EUR 50 000 thousand with which the loan liability as at 31.12.2017 amounted to EUR 65 000 thousand.

The Company's loan agreement with the EBRD was supplemented and amended on 22 July 2021. The amendment confirms the remaining principal amount of EUR 24 109 thousand, after early repayment of the revolving part "B" of the loan, the interest rate is set as 6M EURIBOR with a premium of 1.80% and the repayment period until 30.04.2027. The supplemented and amended loan agreement dated 22.07.2021 was effective on 30.11.2021.

As of 30 September 2026, the balance of the loan amounts to EUR 10 759 thousand (31 December 2025: EUR 11 915 thousand).

On 24 March 2025, EDG West entered into an overdraft agreement with **United Bulgarian Bank AD** in respect of an overdraft facility in a principal amount of up to EUR 19 999 693 for working capital purposes. The overdraft facility is repayable, together with accrued interest thereon, by 20 March 2028. Interest is payable on amounts drawn down under the overdraft agreement at a variable rate based on the short-term interest rate of the lender, plus a margin. In connection with the overdraft agreement, EDG West has also entered into a financial collateral agreement to grant a pledge over certain of EDG West’s receivables from bank accounts opened at the lender, with a right of use over receivables on EDG West’s bank accounts with the lender.

As of 30 September 2026, the subsidiary has utilized the amount of EUR 0 thousand on the bank overdraft (2025: EUR 1 835 thousand).

Electrohold Sales

For financing the activity under the "Trader" license on 29 July 2024 the subsidiary has concluded a loan agreement № 52/730/29.07.2024 with UniCredit Bulbank AD. The interest rate under the agreement is determined as a variable interest index + a margin of 2.20%. The total limit under the loan agreement is EUR 28 750 000 and is divided as follows:

- Overdraft – EUR 22 000 000. Maturity of the limit – 31.05.2027.
- Conditional bank loan (issuance of bank guarantees) – EUR 6 750 000. Maturity of the limit – 15.06.2029.
-

The loan is guaranteed by Eurohold Bulgaria AD according to a guarantee agreement dated 29.07.2024 between UniCredit Bulbank AD and Eurohold Bulgaria AD.

As of 30th September 2026, the subsidiary has utilized the amount of EUR 0 thousand on the bank overdraft (2025: 0 EUR thousand).

Electrohold Trade

The subsidiary has concluded a loan agreement № 55/730/09.09.2024 with UniCredit Bulbank. The interest rate under the loan agreement is determined as a variable interest index + a margin of 2.20%. The total limit under the loan agreement is EUR 50 750 000 and is divided as follows:

- Overdraft – EUR 28 000 000. Maturity of the limit – 31.05.2027.
- Conditional bank loan (issuance of bank guarantees) – EUR 22 750 000. Maturity of the limit – 15.06.2029.

The loan is guaranteed by Eurohold Bulgaria AD according to a guarantee agreement dated 09.09.2024 between UniCredit Bulbank AD and Eurohold Bulgaria AD.

Due amount as of 30 September 2026 is EUR 0 thousand (2025: EUR 21 thousand).

The subsidiary has concluded a conditional bank loan agreement № 00105/730/08.09.2026 with UniCredit Bulbank AD. The total limit under the agreement is EUR 20 000 000 and its purpose is the issuance of bank guarantees. Maturity of the limit – 01.09.2027.

EEEC B.V.

On 3 June 2024 the Parent Company as a borrower entered into Senior Facilities Agreement with, among others, The Bank of New York Mellon, London Branch as agent (the "**SFA**"), for the purpose of mainly refinancing the Senior Facilities Agreement dated 21 July 2021, direct or indirect refinancing, in whole or in part, of the Holdco Facility Agreement, dated 21 July 2021 (with borrower Eastern European Electric Company II B.V.) and capital expenditure of Subsidiary EDG West. The loan is structured in three facilities (Facility B1 Loan, Facility B2 Loan and Facility C Loan) with total available commitments amounting to EUR 460 000 thousand, all three fully utilised on 10.06.2024.
On 20.05.2025 the outstanding amount was fully repaid by the Parent Company by proceeds of the bond issue.

On 28 May 2025 EEEC B.V. entered into a Facility Agreement („Club loan") with a total limit of EUR 9 119 200 towards refinancing or otherwise discharging the outstanding indebtedness in connection with the hedging agreements. The facility bears interest of 6M EURIBOR + 2.4%/min. 2.4%, 3-year duration and semi-annual payments of principal and interest. The limit was fully utilized on 30.05.2025.

Due amount as of 30 September 2026 is EUR 6 182 thousand (2025: EUR 7 631 thousand).

Reconciliation of bank loans

	Bank loans EUR'000
1 January 2025	**479 915**
Cash flows:	
Proceeds	83 964
Repayment	(559 667)
Non-cash:	
Accrued effective interest	17 189
31 December 2025	**21 402**
Cash flows:	
Proceeds	-
Interest payment	(960)
Repayment	(4 623)
Non-cash:	
Accrued effective interest	1 122
30 September 2026	**16 941**

26. Pension and other employee obligations

26.1. Employee benefit liabilities

	30.09.2026	***31.12.2025***
	EUR'000	*EUR'000*
Long-term retirement benefit obligations	12 518	12 518
Short-term retirement benefit obligations	839	1 551
	13 357	**14 069**

27. Lease

27.1. The Group as a lessee

Assets and liabilities recognised in the statement of financial position, acquired upon subsidiaries purchase

The statement of financial position contains the following items and amounts related to leases:

27.1.1. Right of use assets

	Land and Buildings	*Machinery, Technical equipment and Vehicles*	*IFRS 3 adjustments*	***Total***
	EUR'000	*EUR'000*	*EUR'000*	***EUR'000***
Cost value:				
At 1 January 2025	**26 966**	**5 759**	**-**	**32 725**
Additions	1 277	1 132	-	2 409
Disposals	(2 238)	(351)	-	(2 589)
At 31 December 2025	**26 005**	**6 540**	**-**	**32 545**
Additions	758	248	-	1 006
Disposals	(1 020)	(25)	-	(1 045)
At 30 September 2026	**25 743**	**6 763**	**-**	**32 506**
Depreciation:				
At 1 January 2025	**3 187**	**1 912**	**-**	**5 099**
Depreciation for the period	2 877	1 151	-	4 028
Depreciation written off	(1 901)	(205)	-	(2 106)
At 31 December 2025	**4 163**	**2 858**	**-**	**7 021**
Depreciation for the period	2 209	958	-	3 167
Depreciation written off	(995)	(26)	-	(1 021)
At 30 September 2026	**5 377**	**3 790**	**-**	**9 167**
Carrying amount:				
At 31 December 2025	**21 842**	**3 682**	**-**	**25 524**
At 30 September 2026	**20 366**	**2 973**	**-**	**23 339**

Lease liabilities

	30.09.2026	***31.12.2025***
	EUR'000	*EUR'000*
Lease liabilities – long - term	23 234	22 511
Lease liabilities – short - term	1 175	3 829
	24 409	**26 340**

Group's leases and reporting thereof

The Group leases property, energy facilities and vehicles. The energy facilities are owned by third parties and the Group needs to obtain access thereto to provide possibility for electricity transmission and distribution to other customers' sites.

Leases are usually agreed for fixed periods but may contain extension options. They are usually signed with the following terms, divided based on the class of underlying assets, as follows:

- Properties – from 2 – 10 years;
- Facilities – 5 years. The leases of electricity facilities forming part of the electricity distribution grid are treated in accordance with IFRS 16 as right-of-use assets with a 5-year use period, irrespective of the lease term;
- Vehicles – from 2 – 10 years.

The average term of the Group's leases is 6 years.

Leases are negotiated on an individual basis and contain a significant number of conditions and clauses. Leases do not contain mandatory indicators and leases. Underlying right-of-use assets may not be used as collateral under other contracts.

Variable lease payments

The Group has no leases containing variable payment clauses that would result in uncertainty in the measurement of lease payments.

Extension and termination options

The Group accounts for many leases of property and energy sites and facilities containing extension and termination options. These options have been negotiated by the management for the purpose of greater flexibility in managing the right-of-use assets and the Group's economic needs. The Group's management applies significant judgement to determine whether it is reasonably certain to exercise these options. Lease of energy sites and facilities are agreed for a one-month period, but use thereof is long-term, since the Group, in its capacity as operator of the electricity distribution grid and licensee for the electricity distribution activity uses the electricity distribution facilities to other clients/users different from the owners of those energy sites.

Regarding the contract for use of the leased areas and parking places for the Group's administrative needs, there is certainty about long-term use resting on the Group's right to obtain and gain all economic rewards for the entire period of use, manifest in performing management, control and administration of all processes and activities related to its object of activity. These assumptions are reviewed if a significant event or circumstances arise that impact assumptions and if this event is within the Group's control.

Short-term leases and leases of low-value assets

The Group has elected the exemption from recognition of right-of-use assets and lease liabilities under the standard for low-value leases, which include multi-filtration water dispensers and parking places. The costs of short-term leases and low-value leases are disclosed in "Other operating expenses".

27.2. The Group as a lessor

Operating leases

The operating leases of property and energy facilities owned by the Group in its capacity as lessor have a term between 1 and 10 years. All operating leases contain conditions for review of clauses if the lessee exercises its extension options. The lessee has no option to purchase the property after the lease term expires.

Unguaranteed residual values do not pose a significant risk for the Group, since there are no indications that the value of assets would decrease more than would be expected as a result of time or normal wear and tear. The Group has no indications that this situation would change.

28. Government grants

	30.09.2026	***31.12.2025***
	EUR'000	*EUR'000*
Government grants – long term	12 157	12 153
Government grants – short term	1 790	678
	13 947	**12 831**

Government grants are related to the financing of non-current tangible assets and current operations with regards to EDG West's projects.

At the end of 2025, EEEC's largest subsidiary – EDG West – received EUR 12 760 thousand under the EU Modernisation Fund. The funds represent reimbursement of costs already incurred for the procurement of smart electricity meters, which are a core component of the subsidiary's long-term programme for the digitalisation and modernisation of the electricity distribution network.

29. Trade and other payables

	30.09.2026	*31.12.2025*
	EUR'000	*EUR'000*
Trade liabilities	119 879	161 776
Advance payments received	3 286	2 666
Personnel payables	8 964	16 660
Social security payables	2 558	2 808
VAT payables	912	1 338
Other tax payables	971	678
Other current liabilities	10 164	17 668
	146 734	**203 594**

30. Provisions

	30.09.2026	*31.12.2025*
	EUR'000	*EUR'000*
Provisions for court claims and for imposed penalties	2 447	3 941
Energy efficiency provision	2 077	2 118
	4 524	**6 059**

31. Financial risk management

Factors that determine the financial risk

In carrying out their activities, the companies of the Group are exposed to various financial risks:

- market risk, including currency risk, interest rate risk and price risk.
- credit risk;
- liquidity risk;
- operational risk;
- capital risk;
- Military conflict between Russia and Ukraine.

The overall risk management program focuses on the unpredictability of the financial markets and aims to reduce any adverse effects on the Group's financial performance.

31.1. Currency risk

The Group is exposed to currency risk through payments in foreign currency and through its assets and liabilities denominated in foreign currency. Foreign currency exposures result in gains or losses that are recognized in the consolidated statement of profit or loss and other comprehensive income. These exposures comprise the Group's monetary assets that are not denominated in the currency used in the financial statements of local companies.

The Group operates mainly in euro. Management believes that the Group is not exposed to significant adverse effects of changes in the exchange rate.

The Group has no significant investments in countries other than the country in which it operates – Republic of Bulgaria.

31.2. Interest rate risk

Interest rate risk is related to the possibility of a change in the prevailing interest rates in the country. Its impact is expressed by the possibility that the net income of companies may decrease due to an increase in the interest rates at which the Issuers finances its operations. Interest rate risk is included in the category of macroeconomic risks due to the fact that the main prerequisite for a change in interest rates is the occurrence of instability in the financial system as a whole. This risk can be managed through the balanced use of different sources of financial resources.

An increase in interest rates would, all other things being equal, affect the cost of the financial resources used by the Group in implementing various business projects. It may also affect the Group's cost base as a significant portion of the Group's liabilities are interest bearing and their servicing is linked to current interest rates.
Since September 2022 the Governing Council started increasing the ECB's three key interest rates consecutively from 75 basis points to 400 basis points in September 2023.

In June 2024 the European Central Bank (ECB) lowered interest rates for the first time in nearly five years. The ECB lowered its main interest rate on deposits by 25 basis points to 3.75%. Few more decreases had happened till the end of 2024 reaching 3.00%.

During 2025 the trend continued with four more decreases in February, March, April and June each by 25 basis points.

In June 2026 the ECB ended the pause in its policy cycle, raising the three key interest rates by 25 basis points with effect from 17 June 2026, bringing the deposit facility rate to 2.25%, the main refinancing rate to 2.40% and the marginal lending facility rate to 2.65%. The increase responded to renewed inflationary pressure from higher energy prices amid heightened geopolitical uncertainty.

On 10 September 2026 the Governing Council raised the three key ECB interest rates by a further 25 basis points with effect from 16 September 2026, bringing the deposit facility rate to 2.50%, the main refinancing operations rate to 2.65% and the marginal lending facility rate to 2.90%. The decision responded to continued inflationary pressure from the conflict in the Middle East, with inflation expected to remain above target for an extended period.

As of the reporting period end, the bond notes—comprising the largest portion of the Group's debt—carry fixed interest rates. Consequently, the Group's overall debt exposure is largely insulated from interest rate risk.

31.3. Price and Regulatory risk

The Group's exposure to price risk is related to financial assets at fair value, which may include shares and bonds traded on EU stock exchanges.

Under these instruments, there is a risk that the fair value of future cash flows of a financial instrument will fluctuate due to changes in market prices (other than those related to interest rate and currency risk), regardless of whether these changes are caused by factors specific to the individual financial instrument or its issuer, or factors affecting the market.

Price risk is managed by analysing the companies in which investments are made on the basis of their operating activities which are regulated.

The regulatory risk is related to the impact of the existing regulatory framework or its change on the subsidiaries' activities, as well as to potential fines and sanctions due to violations of this framework.

The energy business is a highly regulated economic sector, as the financial results of the companies operating in the field of energy are directly dependent on a number of normative acts and decisions of the state regulatory body (EWRC). Companies are at risk of not taking into account all the costs associated with their normal activities when setting electricity prices by the regulator.

Electrodistribution Grid West performs its licensing activity under general and individual administrative acts issued by The Energy and Water Regulatory Commission, which are obligatory for execution, including with respect to price formation. Prices are regulated by the state.
Upon determining the transaction price, the Group also takes into consideration variable consideration and the presence of a significant financing component (*if any*).

Electrohold Trade supplies electricity to corporate and business customers and trades on the wholesale market at free prices separately determined for each transaction.

Electrohold Sales performs its licensing activity under general and individual administrative acts issued by The Energy and Water Regulatory Commission, which are obligatory for execution, including with respect to price formation.

The prices applicable for sales under the End Supplier and Last Resort Supplier licenses are regulated by the state.

With respect to sales under the Electricity Trade license, the transaction price is usually determined as a fixed (unit) selling price set in a contract, in accordance with a general or customer-specific price list and may include a variable consideration and a significant financing component effect (if any). Sales on the IBEX are carried out at exchange prices valid for the date and time of the transaction.

31.4. Credit risk

The Group's credit risk is mainly related to trade and financial receivables.

The amounts presented in the consolidated statement of financial position are on a net basis, excluding provisions for uncollectible receivables, assessed as such by management, based on previous experience and current economic conditions.

The Group holds assets in a trading portfolio in order to manage credit risk. Credit risk is the risk that one party to a financial instrument will incur a financial loss for the other party to it by failing to meet an obligation. The Group has implemented policies and procedures to mitigate the exposure of the credit risk group.

The Group's investment policy requires strict application of the diversification rules on exposure limits for each type of instrument and for an individual counterparty.

The Group invests its own funds mainly in bank deposits, securities issued by Member States of the European Union, bonds issued by financial institutions or other companies. In order to implement its investment policy, the Group uses professional services of investment intermediaries that have received permission to conduct transactions in the country and abroad.

The structure of trade receivables as at 30 September 2026 and 31 December 2025 based on residual term is presented below:

30.09.2026	Not due	0 – 30 days	30 – 90 days	91-180 days	181-360 days	>360 days	Total
	EUR '000	*EUR '000*	*EUR '000*	*EUR '000*	*EUR '000*	*EUR '000*	*EUR '000*
Receivables from clients (gross carrying amount)	70 889	11 967	1 530	1 058	1 686	30 313	**117 443**
Expected credit loss (Impairment allowance)	(552)	(1 263)	(380)	(389)	(1 163)	(23 250)	**(26 996)**
Expected credit loss (Impairment allowance) for individually impaired receivables	-	(16)	(19)	(2)	(32)	(41)	**(110)**
Additional credit loss for clients in liquidation and insolvency	(7)	(75)	(54)	(23)	(30)	(645)	**(834)**
Additional credit loss on revenues under Art. 56 of RMEV*	(286)	(40)	(71)	(116)	(139)	(4 787)	**(5 439)**
Receivables from clients, net	**70 044**	**10 573**	**1 006**	**528**	**322**	**1 590**	**84 064**

31.12.2025	Not due	0 – 30 days	30 – 90 days	91-180 days	181-360 days	>360 days	**Total**
	EUR '000	*EUR '000*	*EUR '000*	*EUR '000*	*EUR '000*	*EUR '000*	***EUR '000***
Receivables from clients (gross carrying amount)	60 709	11 267	2 309	1 227	1 989	34 216	**111 717**
Expected credit loss (Impairment allowance)	(113)	(233)	(418)	(439)	(1 150)	(26 976)	**(29 329)**
Expected credit loss (Impairment allowance) for individually impaired receivables	-	(16)	(17)	(1)	(28)	(1)	**(63)**
Additional credit loss for clients in liquidation and insolvency	(13)	(65)	(56)	(28)	(33)	(662)	**(857)**
Additional credit loss on revenues under Art. 56 of RMEV*	(252)	(40)	(72)	(117)	(143)	(4 753)	**(5 377)**
Receivables from clients, net	**60 331**	**10 913**	**1 746**	**642**	**635**	**1 824**	**76 091**

* *Electricity Metering Rules* (*Rules on metering electricity volume)*
As at 30 September 2026 the Group is not exposed to substantial credit risk.

31.5. Liquidity risk

Liquidity risk is the risk that the Group will not be able to meet its financial obligations when they become due. The policy in this area is aimed at ensuring that sufficient liquidity is available to service the obligations when they become due, including in extraordinary and unforeseen situations. The objective of the management is to maintain a constant balance between the continuity and flexibility of financial resources through the use of adequate forms of funding.

Liquidity risk management is the responsibility of the Group's management and includes maintaining sufficient cash, negotiating adequate credit lines, preparing analysis and updating cash flow projections.

The table below presents an analysis of the consolidated liabilities of the Group by maturity periods, based on the residual period from the date of the consolidated statement of financial position to the date of realization of the liabilities based on the agreed undiscounted payments.
Detailed information about Group's debt by entities is presented below:

	Effective interest rate	**Maturity**	***2026***		***2025***	
			Short-term portion	Long-term portion	Short-term portion	Long-term portion
			EUR'000	*EUR'000*	*EUR'000*	*EUR'000*
EDG West	6M EURIBOR+ 1.80%/min. 1.8%	30 April 2027	10 759	-	2 615	9 300
EDG West	Short-term interest rate of UBB + 2,30%	20 March 2028	-	-	1 835	-
Electrohold Sales	Average Deposit Index + 2.2%	31 May 2027	-	-	-	-
Electrohold Trade	Average Deposit Index + 2.2%	31 May 2027	-	-	21	-

Eastern European Electric B.V.	6.500%	15 May 2030	12 309	493 162	20 568	491 751
Eastern European Electric B.V.	EURIBOR + 2.40%/min. 2.40%	30 May 2028	3 143	3 039	3 072	4 559
			26 211	**496 201**	**28 111**	**505 610**

31.6. Operational risk

Operational risk is the risk of direct and indirect losses for the Group, caused by various internal factors related to the Group's operations, personnel, technology and infrastructure, as well as external factors other than credit, market and liquidity risk and arising from legal requirements and generally accepted rules for corporate ethics.

The Group defines the operational risk as: the risk of loss or non-realization of profits, which is caused by non-functioning or not implemented internal control systems or by factors external to the Group, such as economic condition, technical progress and others. Legal risk is part of operational risk and arises as a result of non-compliance or misapplication of legal and contractual commitments that would have an adverse effect on operations. The definition does not include strategic risk and reputational risk.

The Group's goal is to manage operational risk in such a way as to prevent financial losses in the most effective way, while maintaining its good reputation and at the same time not hindering initiative and creativity in its actions.

31.7. Capital risk management

With capital management, the Group aims to create and maintain opportunities for it to continue to operate as a going concern and to ensure the appropriate return on investment of shareholders and economic benefits of other stakeholders and participants in its business, as well as to maintain optimal capital structure.

The Group currently monitors the security and capital structure based on the debt ratio, namely the net debt capital to the total amount of capital.

Net debt includes all liabilities, loans, debenture, trade and other payables less the carrying amount of cash and cash equivalents. For capital risk calculation, subordinated debt instruments are treated as equity.
The capital for the presented reporting period can be analysed as follows:

EUR'000	***30.09.2026***	***31.12.2025***
Equity (net assets)	**275 138**	**234 019**
Total liabilities	808 305	853 876
Cash and cash equivalents, and time deposits with banks	(77 214)	(114 815)
Net debt	**731 091**	**739 061**
Total Equity and net debt	**1 006 229**	**973 080**
Indebtedness ratio % (Net debt to Equity and net debt)	**73%**	**76%**

The policy of the Group companies is to maintain stable levels of coverage of capital requirements, as well as to maintain the balance between high return and risk. Management is in the process of continuously analysing the effect of the new regulatory framework on the Group's capital position and operations.

As at 30 September 2026 applied covenants for the Group from creditors according to Facility Agreement dated 28.05.2025 (“Club loan”) are calculated on the basis of **“last twelve months”** data and presented as follows:

Operating companies as of 30.09.2026	**EBITDA** *EUR'000*	**Cash** *EUR'000*
EDG West	110 856	1 780
ELH Sales	27 249	44 997
ELH Trade	7 539	11 798
EH ICT	4 233	829
EH Bulgaria	2 629	8 639
FEPO	865	933
ELH EPC	(1 044)	60
EPC - Electric	44	53
BARA	(11)	96
EEEC	4 452	8 029
Eliminations	(1 778)	-
Upfront fees and transaction costs*	(5 236)	-
TOTAL	**149 798**	**77 214**

* The definitions within the Club loan imply exclusion of upfront fees and transaction costs from the calculations of covenants.

Covenants calculations**	***EUR'000***
Total Debt	516 647
Cash and cash equivalents	77 214
Total NET DEBT	**439 433**
TOTAL EBITDA	**149 798**

**Club loan Definitions

Covenants	**Ratio**	**Reference value**
Leverage covenant	2.93	<4

Leverage: Total Net Debt on the last day of the Relevant Period is EUR **439 433** thousand, Adjusted EBITDA is EUR **149 798** thousand, therefore the ratio is **2.93**.

"Adjusted EBITDA" for the financial period ended 30 September 2026 is EUR **149 798** thousand.

As at 30 September 2026 all required covenants are fully covered by the Group.

****Club loan Definitions:**

- **"Leverage"** means the ratio of Total Net Debt on the last day of that Relevant Period to Adjusted EBITDA in respect of that Relevant Period.

- **"Total Net Debt"** means, at any time, the aggregate amount of all obligations of members of the Company Group for or in respect of Borrowings at that time but:

(a) **excluding** any such obligations to any other member of the Company Group;

(b) **excluding** any such obligations in respect of the Parent Loans;
(c) **including**, in the case of Finance Leases only, their capitalised value;
(d) **deducting** the aggregate amount of Cash and Cash Equivalent Investments held by any member of the Company Group at that time,

and so that no amount shall be included or excluded more than once

- **"Relevant Period"** means each period of twelve months ending on or about the last day of the Financial Year and each period of twelve months ending on or about the last day of each Financial Quarter.

- **"EBIT"** means, in respect of any Relevant Period, the consolidated operating profit of the Company Group before taxation (excluding the results from discontinued operations):

  (a) before deducting any interest, commission, fees, discounts, prepayment fees, premiums or charges and other finance payments whether paid, payable or capitalised by any member of the Company Group (calculated on a consolidated basis) in respect of that Relevant Period;
  (b) not including any accrued interest owing to any member of the Company Group;
  (c) before taking into account any Exceptional Items;
  (d) before deducting any Acquisition Costs;
  (e) before deducting any Transaction Costs;
  (f) after deducting the amount of any profit (or adding back the amount of any loss) of any member of the Company Group which is attributable to minority interests;
  (g) after deducting the amount of any profit of any Non-Company Group Entity to the extent that the amount of the profit included in the financial statements of the Company Group exceeds the amount actually received in cash by members of the Company Group through distributions by the Non-Company Group Entity;
  (h) before taking into account any gain or loss arising from an upward or downward revaluation of any other asset at any time after 31 December 2023;
  (i) before taking into account any effect of any Parent Loan or any loan to any Unrestricted Subsidiary and any profit or gain arising therefrom; and
  (j) before taking into account any gain arising from any Debt Purchase Transaction entered into by a member of the Company Group, in each case, to the extent added, deducted or taken into account, as the case may be, for the purposes of determining operating profits of the Company Group before taxation.

  "EBITDA" means in respect of any Relevant Period, EBIT after adding back any amount attributable to the amortisation, depreciation or impairment of assets of members of the Company Group (and taking no account of the reversal of any previous impairment charge made in that Relevant Period).

- **"Adjusted EBIT"** means, in relation to a Relevant Period, EBIT for that Relevant Period adjusted by:

  (a) including the operating profit before interest and tax (calculated on the same basis as EBIT) of a member of the Company Group (or attributable to a business) acquired during the Relevant Period for that part of the Relevant Period prior to its becoming a member of the Company Group or (as the case may be) prior to the acquisition of the business or assets; and

  (b) excluding the operating profit before interest and tax (calculated on the same basis as EBIT) attributable to any member of the Company Group (or to any business) disposed of during the Relevant Period for that part of the Relevant Period.

- **"Adjusted EBITDA"** means, in relation to a Relevant Period, EBITDA for that Relevant Period adjusted by:

  (a) including the operating profit before interest, tax, depreciation, amortisation and impairment charges (calculated on the same basis as EBITDA) of a member of the Company Group (or

attributable to a business or assets) acquired during the Relevant Period for that part of the Relevant Period prior to its becoming a member of the Company Group or (as the case may be) prior to the acquisition of the business; and

(b) excluding the operating profit before interest, tax, depreciation, amortisation and impairment charges (calculated on the same basis as EBITDA) attributable to any member of the Company Group (or to any business or assets) disposed of during the Relevant Period for that part of the Relevant Period.

The terms and conditions set out in the Information Memorandum of the EEEC B.V.'s Bond issuance (the "**Conditions**") impose certain restrictions on certain payments (including dividend distributions) and the incurrence of additional debt by the Group. Amongst others, the terms and conditions provide for a requirement set on debt incurrence base that the pro-forma Consolidated Net Leverage Ratio must be **3.5:1** or lower.

During the reporting period, the Parent Company distributed EUR 4 250 thousand from its share premium reserve, which required assessment against the applicable restrictions. The pro forma Consolidated Net Leverage Ratio remained below the relevant threshold, and the distribution was within the specifically provided exception from the limitations on restricted payments for distributions intended for interest repayments under the Holdco Facility of Eastern European Electric Company II B.V.

There are no external regulatory capital requirements imposed on the Group.

31.8. Risk of negative impact on the environment

Electrohold group complies with applicable domestic and international legislation in the field of sustainable development, ecology, and environmental protection, in solidarity with the main objectives and principles of environmental law. Concrete actions are taken and policies regarding the sustainable development are followed. The management is currently monitoring the emergence of risks and negative consequences of climate change on the activities of Electrohold group, as well as its impact on climate change.

Risk associated with switching to a low carbon activity. For the most part, the risks associated with this stem from:

- Change in the policies and regulations as a result of the implementation of the European normative documents in the field of climate by the respective regulatory bodies in the Republic of Bulgaria.
- Change in the legislative framework in line with European climate documents and established policies;
- A change in the technologies concerning the distribution network needed to move to a carbon-neutral society.

For the needs of its customers on the open (liberalised) electricity market, the Group buys required energy from the Independent Bulgarian Energy Exchange (IBEX) or on the basis of direct contracts with other traders. Free market energy is a mix of energy produced from both renewable and non-renewable energy sources (fossil fuels and nuclear energy).

At the explicit request of the customers, the energy that will be supplied to them can be purchased only from renewable sources, in which case the customer accepts the price at which this energy is purchased plus the corresponding agreed markup.

At present for the needs of its household customers on regulated market, the Group buys the required energy on a special segment on the Independent Bulgarian Energy Exchange and then is being compensated by the Electricity System Security Fund for the difference between the actual prices from transactions and the base price determined by EWRC

As a step towards liberalization of households, a bill amending the Energy Act was adopted by the National Assembly on 16.05.2025, which introduces a change in the way end suppliers purchase energy effective from 01.07.2025. A new mechanism for long-term contracts for so-called non-standard products was created on the Independent Bulgarian Energy Exchange, which is open to all sellers -

electricity producers and traders. They are united in a common group that offers energy at an average price. The only possible buyers from this new segment are companies with a license for end suppliers. Companies purchase the main part of the electricity for households from this segment but are not obliged to purchase electricity only through this product and also be able to participate in all other segments of the energy exchange - such as "day ahead" or "within the day".

Compensations for household consumers through end suppliers will be calculated every month by EWRC according to the difference between the actual prices from transactions and the base price determined by EWRC, and the amounts will be covered by the Electricity System Security Fund.

Furthermore, the development of EU energy policy towards reducing the production of electricity from fossil fuels and replacing them with low-emission green technologies may lead to significant increases in the price of electricity due to the necessary investments to renovate the production sector. Accompanying mechanisms to promote green energy production, such as the obligation to purchase green certificates to exceed the level of flue gas emissions from electricity production from conventional coal-fired power plants, also affect the final price of the product. The implementation of these policies has a particular impact on the energy sector in Bulgaria, where over 40% of electricity is traditionally produced from high-emission lignite. The obligation to close and decommission existing TPPs in the country can pose a significant risk to the country's energy market, further complicated by the expected full market liberalization and higher connectivity with EU energy markets, where electricity trades at higher price levels. These risks are relevant to the medium and long term, and their severity depends mainly on measures at national and European level and can be affected to a very small extent within the company.

Apart from the above, the Group has obligations within the framework of the EU policy in the field of energy efficiency and the current Scheme of obligations for energy efficiency in the country and is obliged to apply measures to reduce energy consumption to end customers.

In conducting its activities, the Group strives mainly to reduce operating costs and carbon footprint (purchase of recycled paper, recycling of used batteries, campaigns promoting the use of energy-saving light bulbs), as well as new and improved customer service that reduces the time and costs associated with end-user service. In this regard, the Group has undertaken campaigns to promote electronic invoices (instead of paper), the purpose of which is to reduce paper costs and preserve the environment by reducing the carbon footprint of the Group. Additionally, the Group offers services for electronic notifications of liabilities, planned interruptions, and other events aimed at informing consumers in advance and potentially reducing the employment of customer service centers.

In connection with the corporate social responsibility of the Group, one of the criteria when choosing a supplier of company cars under operating lease agreements is that the provided cars meet a higher emission standard.
The Group also conducts other campaigns related to the fight against climate change, such as afforestation of public parks, with the participation of employees and customers of the Group.

31.9. Climate change risk

The management is currently monitoring the emergence of risks and negative consequences of climate change on the activities of the Group, as well as its impact on climate change.

For the most part, the risks associated with climate change are arising from:

- Change in the policies and regulations as a result of the implementation of the European normative documents in the field of climate by the respective regulatory bodies in the Republic of Bulgaria
- Change in the legislation framework in accordance with the European documents related to climate and approved policies;
- Change in the distribution network technologies needed to move to a carbon-neutral society
- Negative effects on suppliers or customers related with climate that affect the Group:
    - Negative effects on the Group's suppliers are possible due to effects in the chain of climate change, which would lead to a refusal to fulfil commitments directly related to the investment program of the Group. This would lead to non-implementation or delayed implementation of this program.

- It is possible to increase the energy prices of end customers, which may lead to a reduction in the amount of energy transferred, both due to savings and due to bankruptcies and business closures. This would reduce the amount of profit. At the same time, newly opened businesses would offset this decline.

32. Non-controlling interest

At 8th June 2025 EPC Electric OOD was established as a new subsidiary of Electrohold EPC EOOD with total capital of EUR 3 thousand. Electrohold EPC EOOD holds 60% ownership interest, while the remaining 40% are owned by Electriccity OOD.

On a subsidiary-by-subsidiary basis, the Group recognizes any non-controlling interest in the subsidiary that is a present ownership interests and entitles their holders to a proportionate share of the entity's net assets in the event of liquidation either at fair value or at the non-controlling interest's proportionate share of the acquiree's net assets.

	30.09.2026	***31.12.2025***
	EUR'000	*EUR'000*
Balance as at 1 January	**(8)**	**-**
Proceeds from issuance of shares to non-controlling interests	-	1
Share of profit/(loss)	21	(9)
Share of OCI	-	-
Balance as at 30 September/31 December	**13**	**(8)**

33. Events after the reporting period

Credit rating

On 5 October 2026, following the transformation of the Eurohold group, Moody's published an updated credit opinion on the Issuer confirming its Ba2 rating with a stable outlook. This is a non-adjusting event and has no impact on the interim condensed consolidated financial statements as at 30 September 2026.

Management is not aware of any other significant events that have occurred since the balance sheet date that were not included in the financial report as per 30 September 2026.

34. Authorisation of the interim consolidated financial statements

The interim condensed consolidated financial statements for the period ended 30 September 2026 were approved for issue by the Management board on 23.11.2026.